

SP AIR TOOLS
CATALOG

FASTENING

SP AIR®

ONE POINT

RATCHET IMPACT SERIES | FLAT HEAD SERIES

RATCHET IMPACT SERIES (PATENTED)

Twice as fast as a standard air ratchet!

The impact mechanism is built into the air ratchet wrench, so that it can be tightened by the power of impact.

- It is safer because there is little backlash when tightening is completed.
- The rotation speed is more than twice as fast as that of a normal ratchet, which makes tightening and loosening fast and easy.
- The speed of tightening can be adjusted by the built-in air regulator on the top rear of the tool.

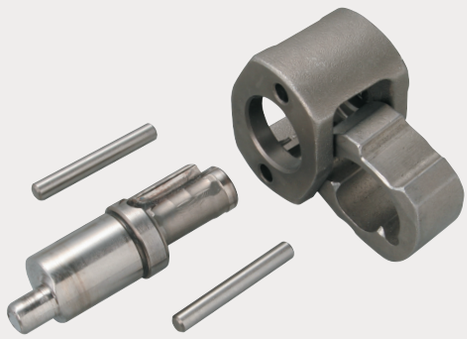

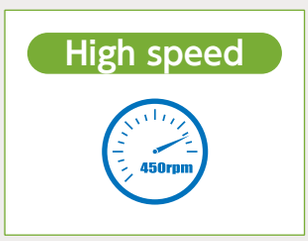

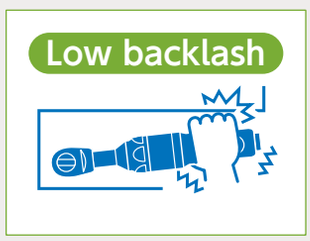

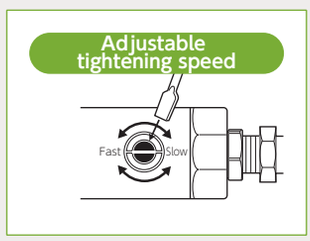

FLAT HEAD SERIES

Outstanding durability, sealed flat head!

Prevents from the spead of the ratchet housing against overload.

- No need for a plastic head cover to keep oil from splashing out.
- The reverse lever is easy to reach, allowing for one handed operation.



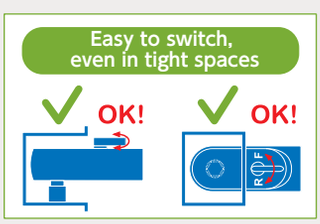

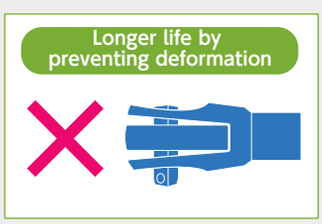



RATCHEPACT

Bolt Capacity 10mm

● Low backlash for safe working in tight spaces. ● Double speed for shorter working time.
● Compact body to fit in your hand. ● Easy to hold plastic grip. ● Built-in power regulator.

SP-7722A

3/8" Ball-Lock

(F) Stepless regulator



Bolt Capacity 10mm [ROTATIONAL HEAD]

● Rotating head (fixed at 90 degree each) . ● Low backlash for safe working in tight spaces.
● Double speed for shorter working time. ● Urethane covered cushion grip. ● Built-in power regulator.

SP-7722RH

3/8" Ball-Lock

(F) Stepless regulator

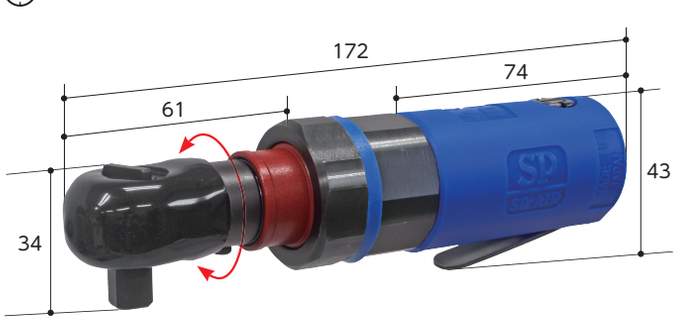

EDP	Model No.	Sq.Drive (inch)	Hammer	Torque Range (N/m)	Free Speed (min^{-1})	Overall Length (mm)	Air Consumption (m^3/min)	Hose Coupling	Net Weight (kg)	JAN (4545695)
370045	**SP-7722A**	3/8"	Single Dog clutch	7～40	500	165	0.4	1/4"NPT	0.6	001889
370048	**SP-7722RH**	3/8"	Single Dog clutch	35	400	172	0.4	1/4"NPT	0.6	003463

Air pressure: 0.62 MPa Air hose inner dia.: 9.5 mm Rear exhaust.

RATCHEPACT

Bolt Capacity **10mm** [FLAT HEAD]

● Low profile flat head. ● No deforming, no splashing of oil. ● Switchable rotations at hand, even in small spaces. ● Low backlash. ● Double speed for shorter working time. ● Urethane covered cushion grip. ● 360 degree rotating rear exhaust.

SP-7265RP

3/8" Ball-Lock

Ⓕ Stepless regulator

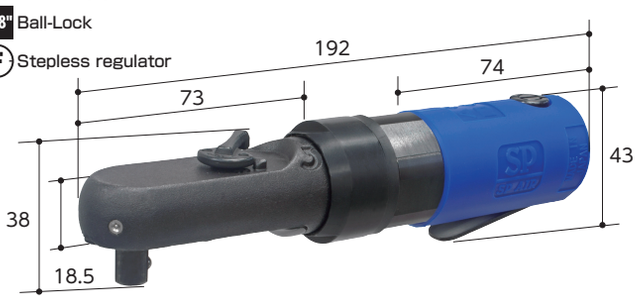

Bolt Capacity **10mm**

● High power. ● Low backlash. ● Double speed for shorter working time. ● Switchable dial for easy operation with gloves. ● Urethane covered cushion grip. ● 360 degree rotating rear exhaust.

SP-7730

3/8" Ball-Lock

Ⓕ Stepless regulator



Bolt Capacity **10mm**

● High power. ● Low backlash. ● Double speed for shorter working time. ● Switchable dial for easy operation with gloves. ● Urethane covered cushion grip. ● 360 degree rotating rear exhaust.

SP-7731

1/2" Ball-Lock



Bolt Capacity **10mm**

● Low backlash for safe working in tight spaces. ● Double speed for shorter working time. ● Compact body to fit in your hand. ● Built-in power regulator.

SP-1765

3/8" Ball-Lock



RATCHEPACT HYBRID

Bolt Capacity **14mm** [HYBRID]

● High power for final tightening. ● Low backlash. ● Long reach for use in deep and narrow spaces.

SP-1170

1/2" Ball-Lock

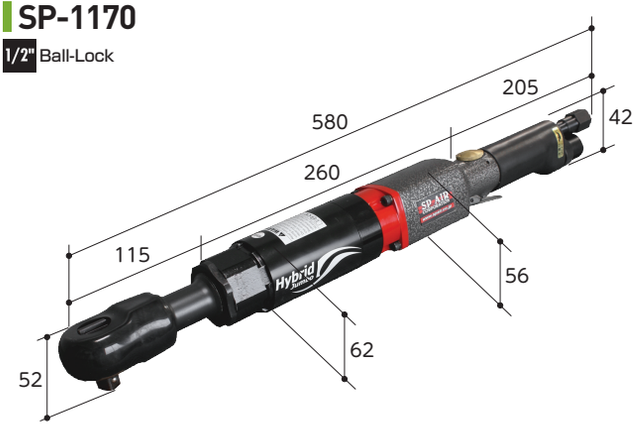

For tractor jaw replacement!

● No need for retightening, 350N-m (max.)
● Built-in pin type clutch hammer for high power.
● Long reach makes it easy to remove bolts from deep places.



EDP	Model No.	Sq.Drive (inch)	Hammer	Torque Range (N·m)	Free Speed (min^{-1})	Overall Length (mm)	Air Consumption (m^3/min)	Hose Coupling	Net Weight (kg)	JAN (4545695)
370052	**SP-7265RP**	3/8"	Single Dog clutch	35	400	192	0.4	1/4"NPT	0.7	003470
370051	**SP-7730**	3/8"	Single Dog clutch	13～90	450	295	0.74	1/4"NPT	1.4	002169
370049	**SP-7731**	1/2"	Single Dog clutch	13～90	450	295	0.74	1/4"NPT	1.4	002176
370189	**SP-1765**	3/8"	Single Dog clutch	10～41	500	176	0.4	1/4"NPT	0.6	002015
370057	**SP-1170**	1/2"	Pin clutch	50～300	210	580	0.72	1/4"NPT	4.15	001414

Air pressure: 0.62 MPa Air hose inner dia.: 9.5 mm Rear exhaust.

FASTENING

RATCHET WRENCH

Bolt Capacity 10mm [FLAT HEAD]

● 1/4" Bit. ● Low profile flat head. ● No deforming, no splashing of oil. ● Switchable rotations at hand, even in small spaces. ● Urethane covered cushion grip. ● 360 degree rotating rear exhaust.

SP-7250H

1/4" Bit chuck retainer
Ⓕ Stepless regulator



Applicable bits
●B33, A4 series

Bolt Capacity 10mm [SEALED HEAD]

● Improved durability of ratchet head ● Switchable rotations at hand, even in small spaces. ● Ball locking. ● Urethane covered cushion grip. ● Built-in power regulator. ● 360 degree rotating rear exhaust.

SP-7765

3/8" Ball-Lock
Ⓕ Stepless regulator



Bolt Capacity 10mm [FLAT HEAD]

● Low profile flat head. ● No deforming, no splashing of oil. ● Switchable rotations at hand, even in small spaces. ● Ball locking. ● Urethane covered cushion grip. ● Built-in power regulator. ● 360 degree rotating rear exhaust.

SP-7265

3/8" Ball-Lock
Ⓕ Stepless regulator



Bolt Capacity 12mm [FLAT HEAD]

● High power. ● Low profile flat head. ● No deforming, no splashing of oil. ● Switchable rotations at hand, even in small spaces. ● Ball locking. ● Urethane covered cushion grip. ● Rear exhaust.

SP-7781

1/2" Ball-Lock

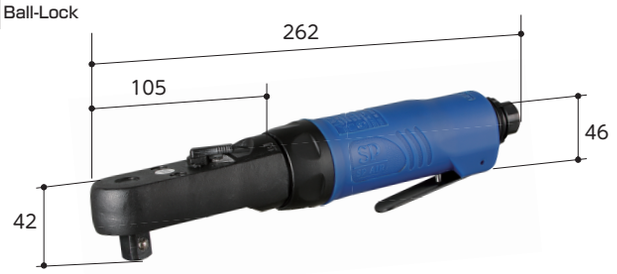

Bolt Capacity 10mm [ROTATIONAL HEAD]

● Rotating head (fixed at 90 degree each) . ● For working in tight spaces. ● Super compact size to fit in your hand.

SP-1772

3/8" Ball-Lock



Bolt Capacity 10mm [W/ SILENCER] [ROTATIONAL HEAD]

● Swivel silencer. ● 360 degree rotating exhaust. ● Rotating head (fixed at 90 degree each) . ● For working in tight spaces.

SP-1772N

3/8" Ball-Lock

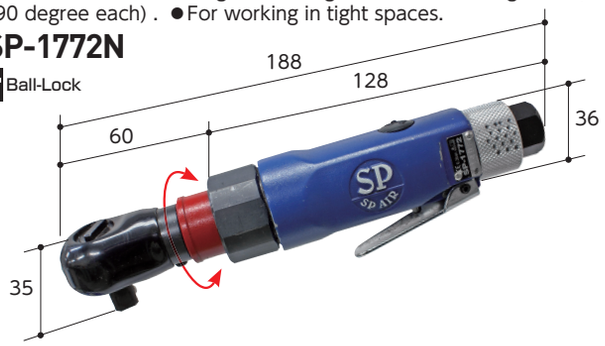

Bolt Capacity 10mm [ROTATIONAL HEAD]

● Rotating head (fixed at 90 degree each) . ● For working in tight spaces.

SP-1133RH

3/8" Ball-Lock

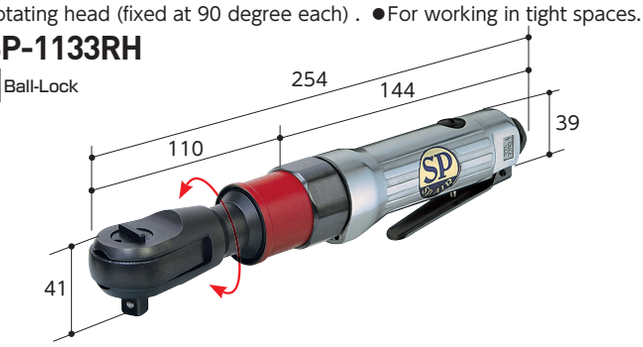

Bolt Capacity 10mm [ROTATIONAL HEAD]

● Rotating head (fixed at 90 degree each) . ● For working in tight spaces.

SP-1133RH-2

1/2" Ball-Lock

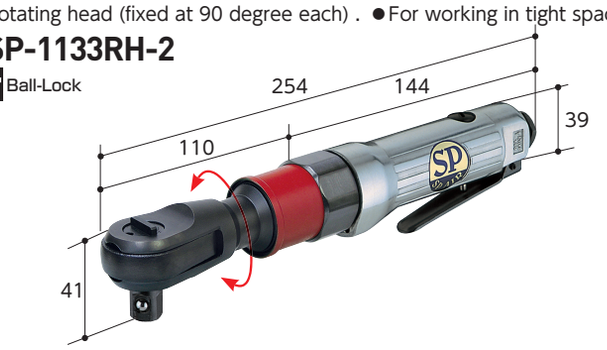

EDP	Model No.	Sq. Drive (inch)	Torque Range (N·m)	Free Speed (min^{-1})	Overall Length (mm)	Air Consumption (m^3/min)	Hose Coupling	Net Weight (kg)	JAN (4545695)
370063	**SP-7250H**	1/4"HEX	20	290	203	0.2	1/4"NPT	0.7	003685
370059	**SP-7765**	3/8"	20	250	205	0.2	1/4"NPT	0.64	000035
370061	**SP-7265**	3/8"	20	400	203	0.4	1/4"NPT	0.7	003487
370062	**SP-7781**	1/2"	30	180	262	0.5	1/4"NPT	1.36	003616
370047	**SP-1772**	3/8"	20	220	168	0.2	1/4"NPT	0.5	001438
370054	**SP-1772N**	3/8"	20	200	188	0.2	1/4"NPT	0.54	002565
370056	**SP-1133RH**	3/8"	30	160	254	0.2	1/4"NPT	1.2	001452
370050	**SP-1133RH-2**	1/2"	30	160	254	0.2	1/4"NPT	1.2	001469

Air pressure: 0.62 MPa Air hose inner dia.: 9.5 mm Rear exhaust.

RATCHET WRENCH

Bolt Capacity 10mm [MINI]

● Super compact size to fit in your hand.

SP-1760A

1/4" Ball-Lock

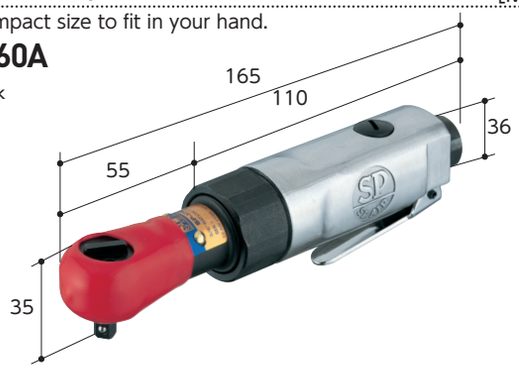

Bolt Capacity 10mm [MINI]

● Super compact size to fit in your hand.

SP-1762

3/8" Ball-Lock

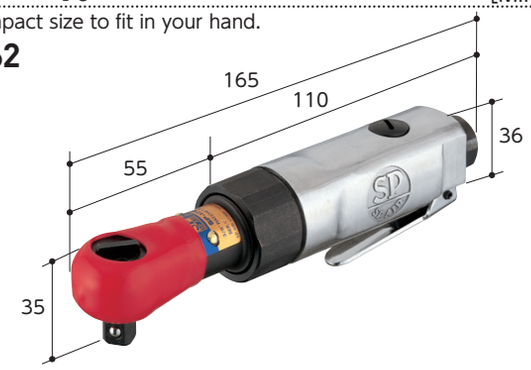

Bolt Capacity 10mm [MINI] [W/ SILENCER]

● Swivel silencer. ● 360 degree rotating exhaust. ● Super compact size to fit in your hand.

SP-1762N

3/8" Ball-Lock

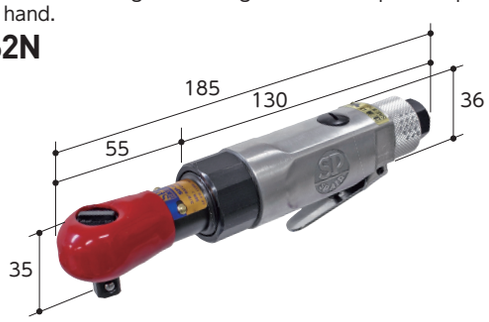

Bolt Capacity 10mm [MINI] [LONG TYPE]

● For working in difficult to reach places such as the engine compartment of a car, or working in a deep space.

SP-1762L

3/8" Ball-Lock

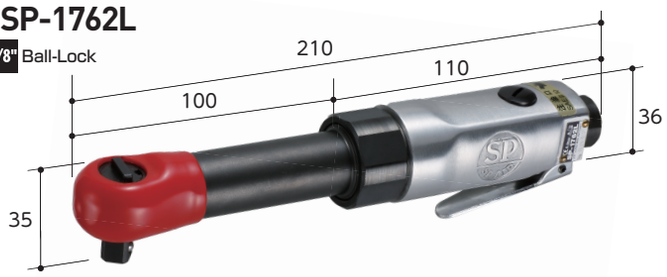

Bolt Capacity 10mm

● For working in tight spaces.

SP-1133

3/8" Ball-Lock

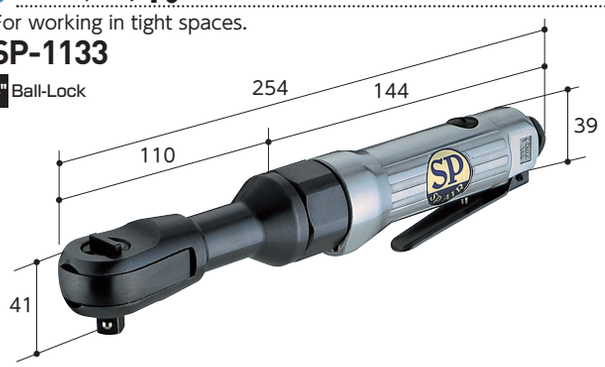

Bolt Capacity 10mm

● For working in tight spaces.

SP-1133-2

1/2" Ball-Lock

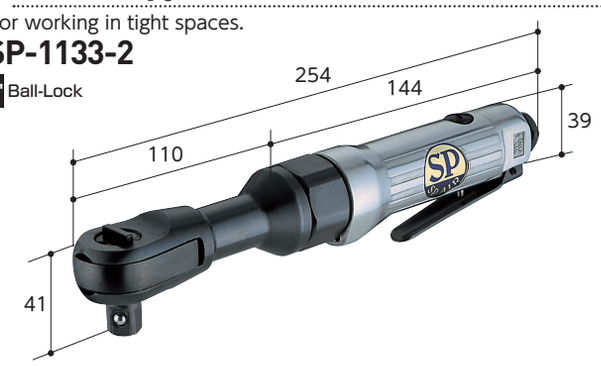

ONE POINT ROTATIONAL HEAD RATCHET WRENCH SERIES

ROTATIONAL HEAD RATCHET WRENCH SERIES

Rotational head for tight spaces! ● Adjustable head locks at every 90 degree interval.



EDP	Model No.	Sq. Drive (inch)	Torque Range (N·m)	Free Speed (min^{-1})	Overall Length (mm)	Air Consumption (m^3/min)	Hose Coupling	Net Weight (kg)	JAN (4545695)
370060	**SP-1760A**	1/4"	20	310	165	0.2	1/4"NPT	0.5	000028
370046	**SP-1762**	3/8"	20	310	165	0.2	1/4"NPT	0.5	000011
370058	**SP-1762N**	3/8"	20	200	185	0.2	1/4"NPT	0.54	002558
370173	**SP-1762L**	3/8"	20	310	210	0.2	1/4"NPT	0.6	003852
370055	**SP-1133**	3/8"	30	160	254	0.2	1/4"NPT	1.2	000042
370053	**SP-1133-2**	1/2"	30	160	254	0.2	1/4"NPT	1.2	000059

Air pressure: 0.62 MPa Air hose inner dia.: 9.5 mm Rear exhaust.

FASTENING

SP SP AIR®

ONE POINT

IMPACT WRENCH SERIES

Hammer mechanism

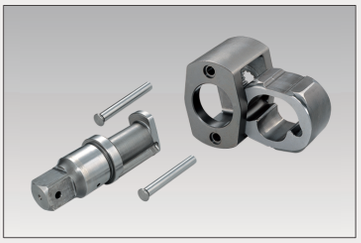

Single dog hammer
One blow per revolution, powerful tightening. High vibration.
Power: A, Durability: A, Rise: C
Low vibration: C, Low cost: A, Easy to repair: A

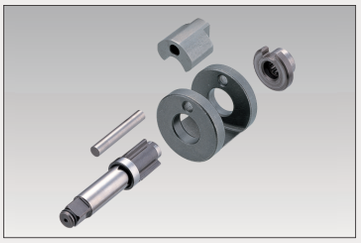

Single Hammer
One blow per revolution, strong tightening.
Power: C, Durability: B, Rise: C
Low vibration: B, Low cost: A, Easy to repair: A



Pin Type Hammer
Two pins strike simultaneously. Powerful, low vibration.
Power: A, Durability: C, Rise: A
Low vibration: A, Low cost: B, Easy to repair: C

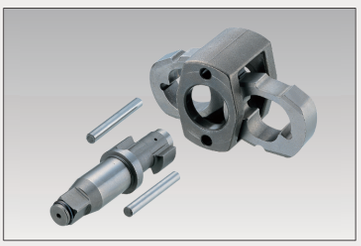

Twin dog Hammer
Two blows per revolution, well balanced performance.
Power: A, Durability: B, Rise: B
Low vibration: C, Low cost: B, Easy to repair: A

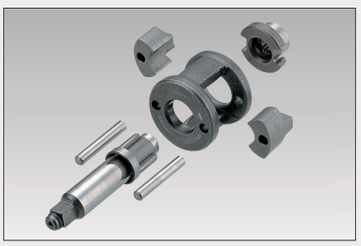

Double Hammer
Two blows per revolution, strong and stable tightening.
Power: C, Durability: C, Rise: B
Low vibration: A, Low cost: B, Easy to repair: B

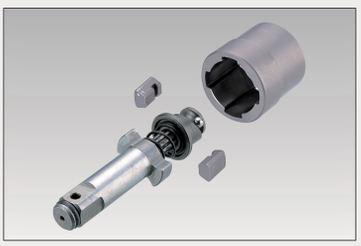

Dyna Jaw Hammer
Two hammers, powerful, low vibration.
Power: A, Durability: C, Rise: A
Low vibration: A, Low cost: B, Easy to repair: C

Reverse switching



Push button (side) (patented)
Located above the throttle and can be operated with one hand.



Push button (front/rear)
Located above the throttle and can be operated with one hand.



Butterfly lever type
Switches the rotating direction in which the batterfly lever is folded.



Twin regulator type
Adjustable for each left and right rotation, push type.

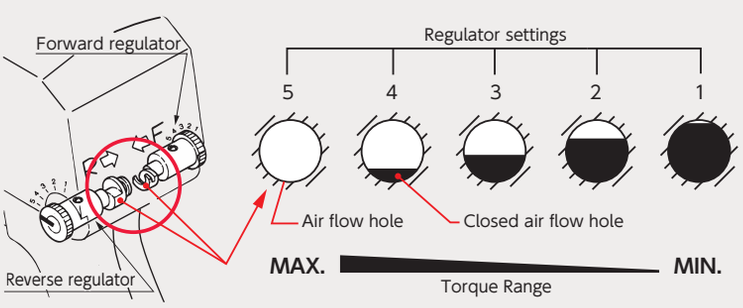

Regulator (Torque adjustment)

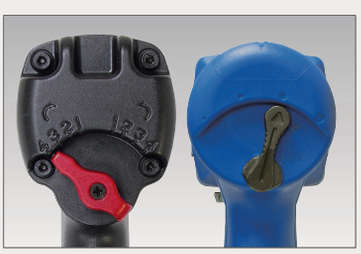

Lever type
Switch by a lever on the back of the air motor.
4 steps (1: weak to 4: strong)
Can be operated with one hand.
Available dual-switching both rotating direction and torque selection



Dial type
Switch by turning the knob or dial.
4 steps (1:weak to 4:strong)
Large knob for easy switching.



Inlet integrated
Integrated into the air inlet. Rotating type
4 steps (1:weak to 4:strong) or stepless
Used for compact models.

ONE POINT

COMPOSITE SERIES

Lightweight/compact, tough composite body

The composite body is made of reinforced plastic containing glass fiber, which makes it lightweight and compact.
It is also easy to use: the reverse switch can be operated with one hand.

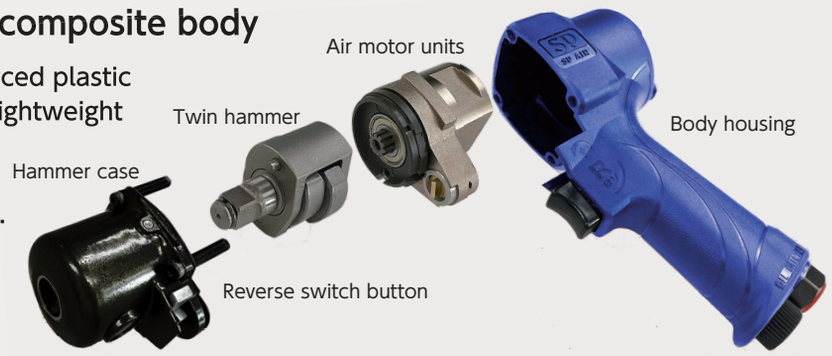

IMPACT WRENCH COMPOSITE

Bolt Capacity 10mm

●Lightweight and short body. ●One hand reverse button (patented).

SP-7825

3/8" Retainer ring

④ Air inlet regulator dial



Bolt Capacity 14mm [W/ SILENCER]

●Lightweight and short body. ●One hand reverse button (patented).
●With protective cover

SP-7146EX-S

3/8" Retainer ring

④ Regulator lever



Retainer ring

Bolt Capacity 16mm [W/ SILENCER]

●Lightweight and short body. ●One hand reverse button (patented).
●With protective cover

SP-7146EX

1/2" Retainer ring

④ Regulator lever



Bolt Capacity 16mm [W/ SILENCER]

●Lightweight and short body. ●One hand reverse button (patented).
●With protective cover

SP-7147EXA

1/2" Retainer ring

④ Regulator lever



Bolt Capacity 16mm

●High power and compact body. ●One hand reverse button (patented).

SP-7144A

1/2" Retainer ring

④ Regulator lever

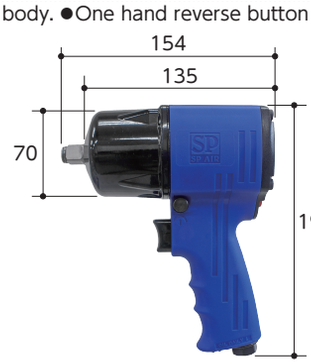

Bolt Capacity 16mm

●High power and compact body. ●One hand reverse button (patented).

SP-7145A

1/2" Pin-lock

④ Regulator lever



EDP	Model No.	Sq.Drive (inch)	Hammer	Torque Range (N·m)	Free Speed (min^{-1})	Overall Length (mm)	Air Consumption (m^3/min)	Hose Coupling	Net Weight (kg)	JAN (4545695)
370027	**SP-7825**	3/8"	Double Hammer	7～68	17000	110	0.4	1/4"NPT	0.68	001735
370037	**SP-7146EX-S**	3/8"	Twin dog clutch	50～270	9000	133	0.6	1/4"NPT	0.98	002961
370024	**SP-7146EX**	1/2"	Twin dog clutch	50～330	9000	133	0.6	1/4"NPT	0.99	002893
370031	**SP-7147EXA**	1/2"	Twin dog clutch	50～350	9000	119	0.6	1/4"NPT	0.97	003395
370026	**SP-7144A**	1/2"	Twin dog clutch	50～550	6200	154	0.6	1/4"NPT	1.78	002039
370188	**SP-7145A**	1/2"	Pin clutch	50～570	6200	166	0.6	1/4"NPT	1.9	003890

Air pressure: 0.62 MPa Air hose inner dia.: 9.5 mm Rear exhaust.

FASTENING

IMPACT WRENCH COMPOSITE

Bolt Capacity 16mm

● Lightweight. ● Reverse lever.

SP-7143

1/2" Retainer ring

4 Regulator dial

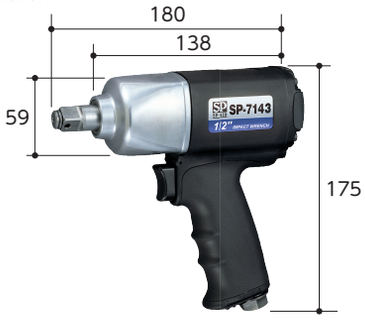

Bolt Capacity 16mm

● Lightweight. ● Reverse lever.

SP-7143DX

1/2" Retainer ring

4 Regulator lever



Bolt Capacity 14mm

● Lightweight. ● Reverse lever.

SP-7142S

3/8" Retainer ring

4 Regulator dial



Bolt Capacity 16mm

● Lightweight. ● Reverse lever.

SP-7140

1/2" Retainer ring

4 Regulator dial



Bolt Capacity 25mm

● One hand reverse button (patented).

SP-7150A-V8

3/4" Retainer ring

4 Regulator dial



Bolt Capacity 25mm

● One hand reverse button (patented).

SP-7151AL-V8

3/4" Retainer ring

4 Regulator dial



Option

● #26061990 Support grip

Bolt Capacity 32mm

● Lightweight. ● One hand reverse button (patented).

SP-7191A-V8

1" Retainer ring

4 Regulator dial



Option

● #26061990 Support grip

EDP	Model No.	Sq. Drive (inch)	Hammer	Torque Range (N·m)	Free Speed (min^{-1})	Overall Length (mm)	Air Consumption (m^3/min)	Hose Coupling	Net Weight (kg)	JAN (4545695)
370021	**SP-7143**	1/2"	Dyna Jaw clutch	50～280	8000	180	0.6	1/4"NPT	1.36	000165
370028	**SP-7143DX**	1/2"	Dyna Jaw clutch	50～320	8000	173	0.6	1/4"NPT	1.36	001629
370187	**SP-7142S**	3/8"	Twin Dog clutch	50～270	7500	163	0.4	1/4"NPT	1.4	001049
370032	**SP-7140**	1/2"	Twin dog clutch	50～450	5800	185	0.6	1/4"NPT	2.1	000158
370029	**SP-7150A-V8**	3/4"	Twin Dog clutch	300～1000	4300	237	1.3	3/8"NPT	3.7	002572
370041	**SP-7151AL-V8**	3/4"	Pin clutch	270～900	4300	320	0.8	3/8"NPT	4.5	002503
370042	**SP-7191A-V8**	1"	Pin clutch	280～1100	4300	320	0.8	1/2"NPT	4.65	002602

Air pressure: 0.62 MPa　Air hose inner dia.: 9.5 mm　Rear exhaust.

IMPACT WRENCH COMPOSITE

Bolt Capacity 10mm [STRAIGHT TYPE]

●Smallest palm-size. ●Butterfly lever. ●360 degree Swivel inlet.

SP-1850

3/8" Retainer ring

④ Regulator dial



Bolt Capacity 10mm [STRAIGHT TYPE]

●Lightweight and compact. ●Butterfly lever for Right/Left rotation switching. ●360 degree swivel inlet.

SP-1138

3/8" Retainer ring

④ Regulator dial

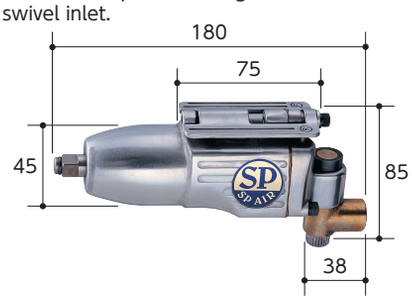

Bolt Capacity 10mm

●Lightweight and compact. ●Reverse button. ●Variable speed trigger.

SP-1135B

3/8" Retainer ring

Ⓕ Stepless regulator dial



Bolt Capacity 16mm

●Reverse button. ●Variable speed trigger.

SP-1140EX

1/2" Retainer ring

④ Regulator lever



Option

●#02413811 Protect cover

Bolt Capacity 16mm [LIGHTWEIGHT TYPE]

●Lightweight. ●Reversible lever. ●Variable speed trigger. ●With protective cover

SP-1143

1/2" Retainer ring

④ Regulator lever



Bolt Capacity 14mm [LIGHTWEIGHT TYPE]

●Compact body. ●Reverse button. ●Variable speed trigger. ●Built-in power regulator.

SP-1143S

3/8" Retainer ring

④ Regulator lever



EDP	Model No.	Sq. Drive (inch)	Hammer	Torque Range (N·m)	Free Speed (min^{-1})	Overall Length (mm)	Air Consumption (m^3/min)	Hose Coupling	Net Weight (kg)	JAN (4545695)
370025	**SP-1850**	3/8"	Double Hammer	5～50	10000	137	0.2	3/8"NPT	0.5	001353
370035	**SP-1138**	3/8"	Single Hammer	7～90	12500	180	0.3	3/8"NPT	0.9	001278
370038	**SP-1135B**	3/8"	Single Hammer	7～90	12000	138	0.3	3/8"NPT	1.3	000103
370033	**SP-1140EX**	1/2"	Twin dog clutch	50～500	6000	185	0.6	1/4"NPT	2.6	000189
370023	**SP-1143**	1/2"	Dyna Jaw clutch	50～320	8000	163	0.4	1/4"NPT	1.6	000196
370181	**SP-1143S**	3/8"	Dyna Jaw clutch	50～320	8000	163	0.4	3/8"NPT	1.6	002114

Air pressure: 0.62 MPa Air hose inner dia.: 9.5 mm Rear exhaust Top exhaust (SP-1850, SP-1138).

FASTENING

IMPACT WRENCH

Bolt Capacity 16mm

● Reversible lever. ● Integrated air regulator and throttle trigger

SP-1145A

1/2" Retainer ring

④ Regulator dial



Option

● #01455640 Protect cover

Bolt Capacity 16mm

● Twin regulators (5-step adjustment). ● Variable speed trigger.

SP-1148F

1/2" Retainer ring

⑤ Twin regulator

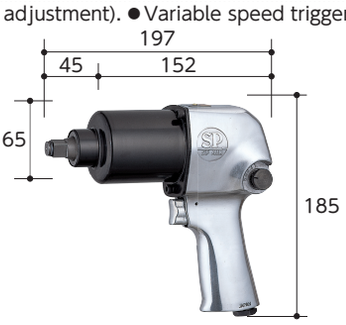

Bolt Capacity 16mm

● Twin regulators (5-step adjustment). ● Variable speed trigger.

SP-1148TR-X

1/2" Retainer ring

⑤ Twin regulator

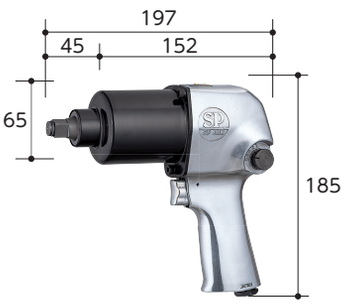

Bolt Capacity 22mm

● Twin regulators (6-step adjustment). ● Variable speed trigger.

SP-1156TR

3/4" Retainer ring

⑥ Twin regulator

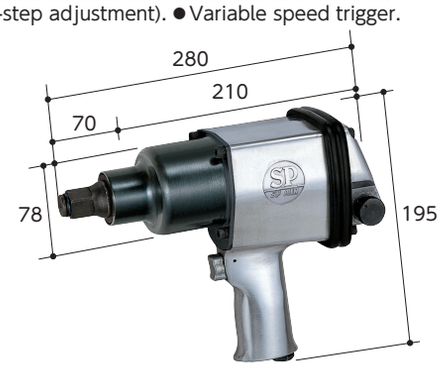

Bolt Capacity 25mm

● Twin regulators (5-step adjustment). ● Variable speed trigger.

SP-1158A

3/4" Retainer ring

⑤ Regulator Dial

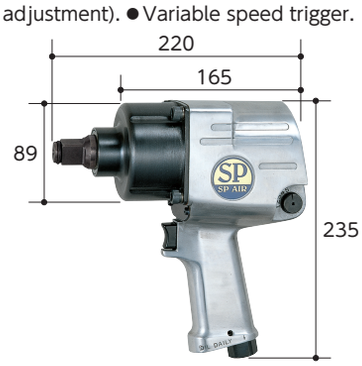

Bolt Capacity 41mm

● Pinless hammer mechanism is durable and hard hitting using fewer parts and less down time. ● Regulator system allows mechanics to maintain full power in multiple directions

SP-1193GEP-2

1" Retainer ring

③ Regulator lever

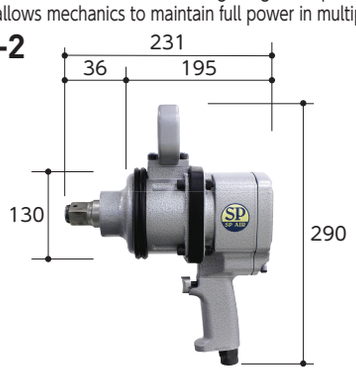

EDP	Model No.	Sq. Drive (inch)	Hammer	Torque Range (N·m)	Free Speed (min^{-1})	Overall Length (mm)	Air Consumption (m^3/min)	Hose Coupling	Net Weight (kg)	JAN (4545695)
370022	**SP-1145A**	1/2"	Pin clutch	55～420	6000	190	0.6	1/4"NPT	2.5	000004
370182	**SP-1148F**	1/2"	Twin Dog clutch	55～475	6000	197	0.6	1/4"NPT	2.5	000998
370183	**SP-1148TR-X**	1/2"	Pin clutch	55～475	6300	197	0.6	1/4"NPT	2.7	000172
370034	**SP-1156TR**	3/4"	Pin clutch	280～1100	4600	280	0.8	3/8"NPT	5.4	000202
370040	**SP-1158A**	3/4"	Single dog hammer	270～900	5500	220	1.11	3/8"NPT	5.5	000219
370185	**SP-1193GEP-2**	1"	Pinless Hammer	280～2100	4000	290	1.56	1/2"NPT	11	002374

Air pressure: 0.62 MPa　Air hose inner dia.: 9.5 mm　Rear exhaust, Front exhaust(SP-1145A,SP-1148F).

IMPACT WRENCH

Bolt Capacity 41mm

● Long anvil. ● Pinless hammer mechanism is durable and hard hitting using fewer parts and less down time. ● Regulator system allows mechanics to maintain full power in multiple directions

SP-1193GE-6

1" Retainer ring

F R
2 1 Regulator dial

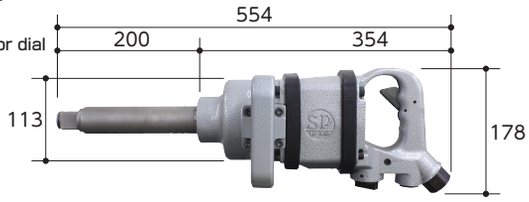

Bolt Capacity 50mm

● Long anvil. ● Oil bath system for durability. ● Reverse lever. ● Variable speed trigger.

SP-5000GE

1" Pin-lock

F R
2 1 Regulator dial

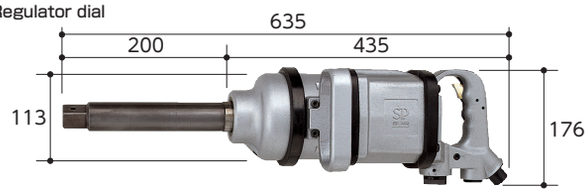

Bolt Capacity 38mm

● Long anvil. ● Oil bath system for durability. ● Reverse lever. ● Variable speed trigger.

SP-380DX

1" Retainer ring

4 Regulator dial

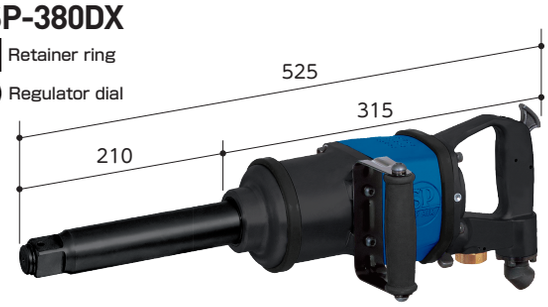

Bolt Capacity 38mm

● Long anvil. ● Oil bath system for durability. ● Reverse lever. ● Variable speed trigger.

SP-390DX

1" Retainer ring

4 Regulator dial

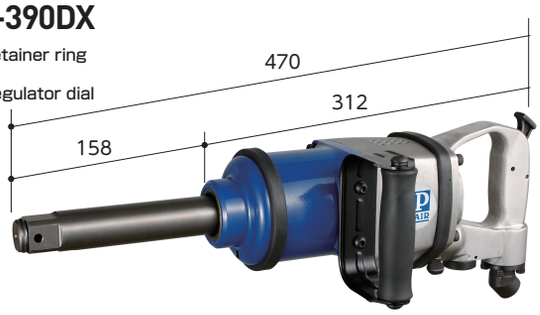

Bolt Capacity 55mm

● Short anvil. ● Reverse dial switch. ● Variable speed trigger.

SP-6500

1-1/2" Pin-lock

4 Regulator dial



IMPACT DRIVER

Screw Capacity 6mm

● Lightweight composite body. ● On hand reverse button (Patented).

SP-7825H

1/4" Bit sleeve retainer

4 Air inlet regulator dial



Applicable bits
● A14, A16 series

Screw Capacity 6~8mm

● Lightweight. ● One hand reverse Lever. ● Four steps adjustable air regulator. ● Variable speed trigger.

SP-8102B

1/4" Bit sleeve retainer

4 Air inlet regulator dial

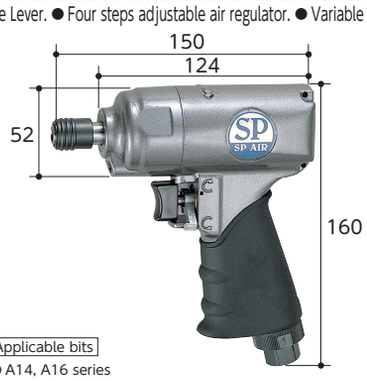

Applicable bits
● A14, A16 series

EDP	Model No.	Sq. Drive (inch)	Hammer	Torque Range (N·m)	Free Speed (min^{-1})	Overall Length (mm)	Air Consumption (m^3/min)	Hose Coupling	Net Weight (kg)	JAN (4545695)
370184	**SP-1193GE-6**	1"	Pinless Hammer	280～2100	4000	610	1.56	1/2"NPT	13	002367
370186	**SP-5000GE**	1"	Pinless Hammer	280～2200	3000	635	1.41	1/2"NPT	17.9	001766
370030	**SP-380DX**	1"	Twin dog clatch	200～1250	3500	525	1	3/8"NPT	7.8	002978
370192	**SP-390DX**	1"	Twin dog clatch	350～1200	4000	470	1	3/8"NPT	7.1	601119
370044	**SP-6500**	1-1/2"	Pin clatch	1500～4200	3600	490	0.7	1/2"NPT	18	003203
370078	**SP-7825H**	1/4"HEX	Double Hammer	7～48	17000	120	0.4	1/4"NPT	0.68	001742
370080	**SP-8102B**	1/4"HEX	Double Hammer	7～70	11500	150	0.4	1/4"NPT	1	000943

Air pressure: 0.62 MPa Air hose inner dia.: 9.5 mm Rear exhaust, Top exhaust (SP-380DX, SP-390DX, SP-6500, SP-5000GE, SP-1193GE-6).

DRILLING

REVERSIBLE DRILL

Drill Chuck 10mm(3/8") [COMPOSITE]

● Low speed and high torque. ● Short ! Double gear mechanism. ● Lightweight composite body. ● Variable speed trigger. ● On hand reverse button. ● With handle grip. ● For spot weld removal.

SP-7520

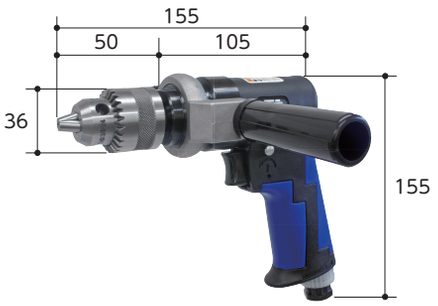

Drill Chuck 10mm(3/8") [KEYLESS CHUCK]

● Keyless chuck. ● Low speed and high torque. ● Short ! Double gear mechanism. ● Lightweight composite body. ● Variable speed trigger. ● On hand reverse button. ● With handle grip. ● For spot weld removal.

SP-7520KL

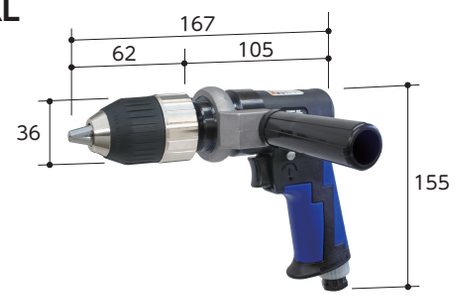

Drill Chuck 10mm(3/8") [COMPOSITE]

● Lightweight composite body. ● Variable speed trigger. ● On hand reverse button. ● With handle grip.

SP-7525



Option
● Keyless drill chuck : Model No.SP-DCKL

Drill Chuck 10mm(3/8") [KEYLESS CHUCK]

● Keyless chuck. ● Lightweight composite body. ● Variable speed trigger. ● On hand reverse button. ● With handle grip.

SP-7525KL



Drill Chuck 13mm(1/2") [COMPOSITE]

● Low speed and high torque. ● Short ! Double gear mechanism. ● Lightweight composite body. ● Variable speed trigger. ● On hand reverse button. ● With handle grip.

SP-7527

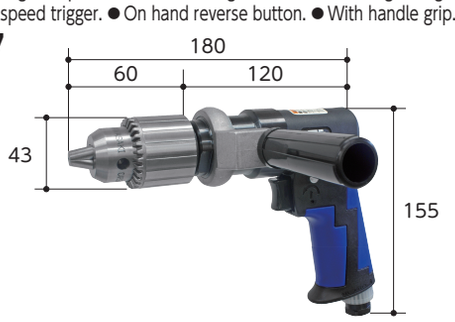

Drill Chuck 13mm(1/2") [KEYLESS CHUCK]

● Keyless chuck. ● Low speed and high torque. ● Short ! Double gear mechanism. ● Lightweight composite body. ● Variable speed trigger. ● On hand reverse button. ● With handle grip.

SP-7527KL

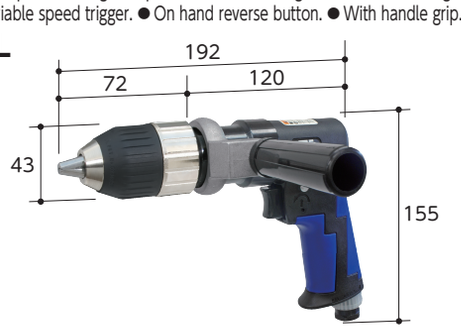

Drill Chuck 10mm(3/8")

● Precision drill chuck. ● Right/Left rotation switch Lever with One Hand. ● Also for tapping work

SP-1525



Option
● SP-DCKL Keyless drill chuck

Drill Chuck 13mm(1/2")

● Low speed rotation and high torque. ● Precision drill chuck. ● Right/Left rotation switch Lever. ● With handle grip

SP-1527

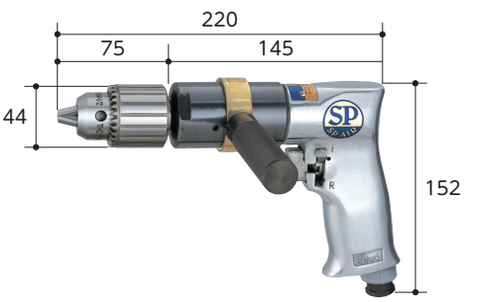

EDP	Model No.	Drill Renge (mm)	Free Speed (min^{-1})	Overall Length (mm)	Air Consumption (m^3/min)	Hose Coupling	Net Weight (kg)	JAN (4545695)
370068	**SP-7520**	1.0～10	500	155	0.4	1/4"NPT	1.04	001704
370178	**SP-7520KL**	1.0～10	500	167	0.4	1/4"NPT	1.04	001773
370070	**SP-7525**	1.0～10	2000	155	0.4	1/4"NPT	0.95	001711
370179	**SP-7525KL**	1.0～10	2000	167	0.4	1/4"NPT	0.95	001780
370066	**SP-7527**	1.0～13	400	180	0.4	1/4"NPT	1.33	001728
370180	**SP-7527KL**	1.0～13	400	192	0.4	1/4"NPT	1.33	001797
370075	**SP-1525**	1.0～10	2200	195	0.4	1/4"NPT	1.23	000400
370076	**SP-1527**	1.0～13	500	220	0.4	1/4"NPT	2.9	000417

Air pressure: 0.62 MPa　Air hose inner dia.: 9.5 mm　Rear exhaust.

ANGLE REVERSIBLE DRILL

Drill Chuck 10mm(3/8") [LOW PROFILE]

●Low profile head for narrow space. ●Lever type ●Reverse button.
●Also for tapping work.

SP-1514AH

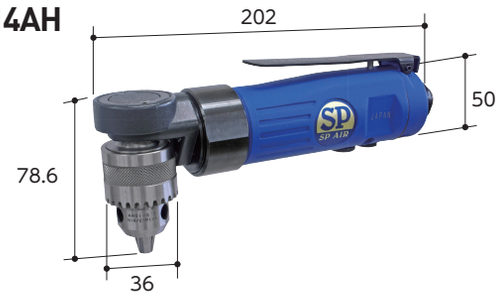

Drill Chuck 13mm(1/2")

●Low speed rotation and high torque. ●Lever type ●Reverse button.

SP-1513AH

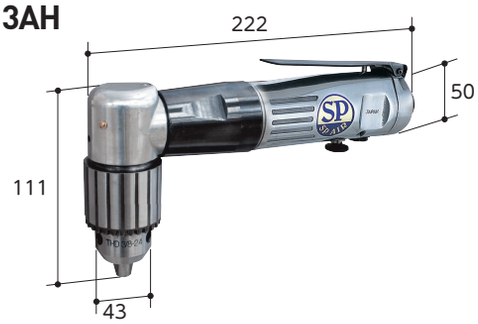

Drill Chuck 10mm(3/8")

●Lever type ●Reverse button. ●Also for tapping work

SP-1510AH

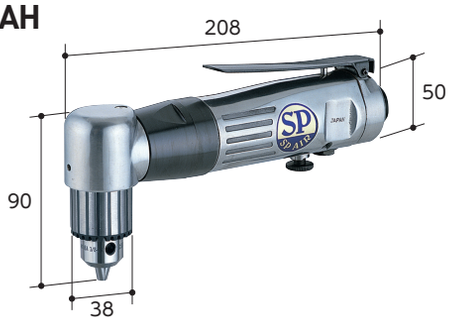

DRILL

Drill Chuck 10mm(3/8") [STRAIGHT TYPE]

●Precision drill chuck. ●Lever type. ●Right rotation only.

SP-1523D

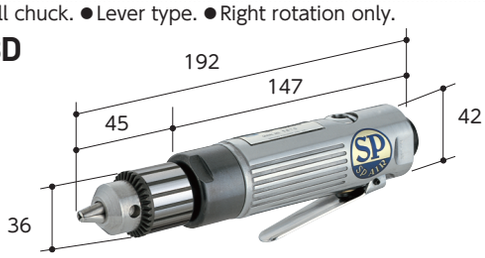

Option
●#SP-DCKL Keyless drill chuck

Drill Chuck 10mm(3/8")

●Precision drill chuck. ●Right rotation only.

SP-1511

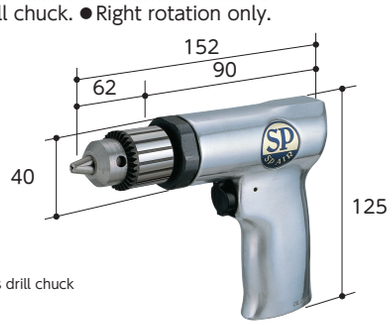

Option
●#SP-DCKL Keyless drill chuck

Drill Chuck 10mm(3/8") [W/ SILENCER]

●Precision drill chuck. ●Right rotation only. ●With silencer.

SP-1522

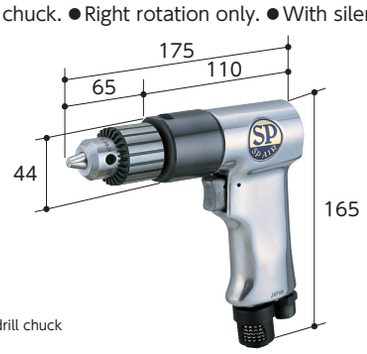

Option
●#SP-DCKL Keyless drill chuck

Drill Chuck 10mm(3/8") [W/ SPEED SWITCH]

●Four adjustable speeds (1) Spot weld removal, (2)Dia. 8-10 mm, (3) (4) Dia. 1-8 mm, ●Large trigger for easy operation. ●Right rotation only.

SP-1540



Option
●#SP-DCKL Keyless drill chuck

EDP	Model No.	Drill Renge (mm)	Free Speed (min^{-1})	Overall Length (mm)	Air Consumption (m^3/min)	Hose Coupling	Net Weight (kg)	JAN (4545695)
370074	**SP-1514AH**	1.0~10	1700	202	0.4	1/4"NPT	1.13	003067
370073	**SP-1513AH**	1.0~13	220	222	0.3	1/4"NPT	1.53	002183
370071	**SP-1510AH**	1.0~10	1800	208	0.3	1/4"NPT	1.22	000363
370077	**SP-1523D**	1.0~10	3800	192	0.4	1/4"NPT	1	000394
370064	**SP-1511**	1.0~10	2500	152	0.4	1/4"NPT	0.9	000370
370065	**SP-1522**	1.0~10	2500	175	0.4	1/4"NPT	1.23	000387
370072	**SP-1540**	1.0~10	3000	180	0.4	1/4"NPT	0.98	000424

Air pressure: 0.62 MPa Air hose inner dia.: 9.5 mm Rear exhaust.

DUST FREE DUAL ACTION SANDER

Pad Size Φ125mm(5")

● For finishing and polishing ● Easy to grip. ● Built-in power regulator. ● Dust hose and collection bag included.

SP-3905DF-A5M

M Velcro Pad

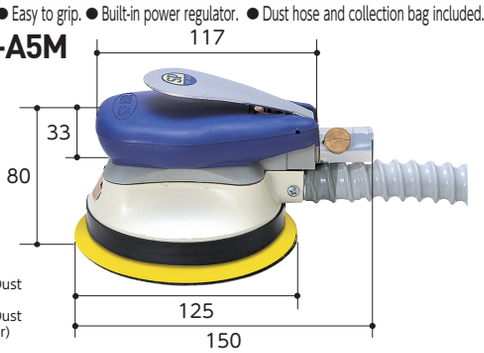

Replacement parts
● #AS-113 125 mm Pad (Dust suction type, velcro)
● #AS-112 125 mm Pad (Dust suction type, for stick paper)

Pad Size Φ125mm(5")

● For finishing and polishing ● Lower center of gravity for improved stability. ● Easy to grip. ● Built-in power regulator. ● Dust hose and collection bag included.

SP-3605DF-A5M

M Velcro Pad

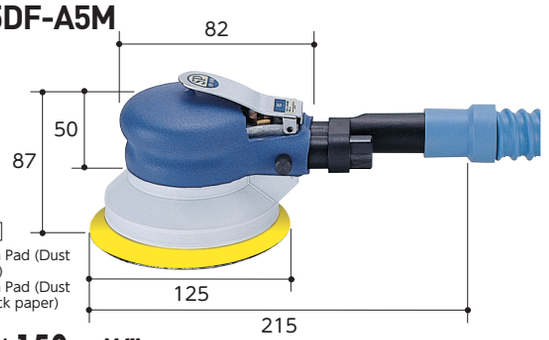

Replacement parts
● #AS-113 125 mm Pad (Dust suction type, velcro)
● #AS-112 125 mm Pad (Dust suction type, for stick paper)

Pad Size Φ125mm(5")

● Lightweight ● For finishing and polishing ● Self suction/other dust suction switchable. ● Mesh sandpaper can also be used ● Built-in power regulator. ● Dust hose and collection bag included.

SP-3006DF-5

M Velcro Pad

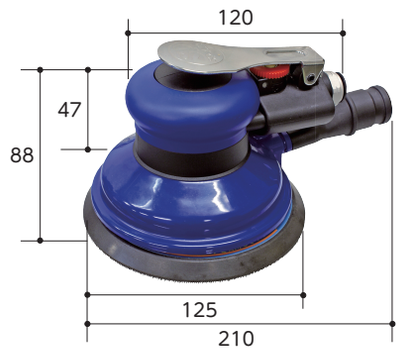

Replacement parts
● #ASP-3006 125 mm Pad (Dust suction type, velcro)

Pad Size Φ150mm(6")

● For finishing and polishing ● Lower center of gravity for improved stability. ● Easy to grip. ● Built-in power regulator. ● Dust hose and collection bag included.

SP-3606DF-A5M

M Velcro Pad

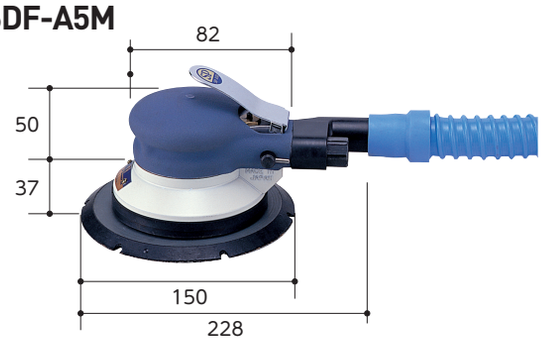

DUAL ACTION SANDER

Pad Size Φ125mm(5")

● For finishing and polishing ● Lower center of gravity for improved stability. ● Easy to grip. ● Built-in power regulator.

SP-3905-A5M

M Velcro Pad

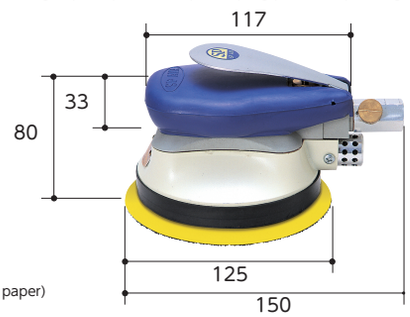

Replacement parts
● #AS-111 125 mm Pad (Velcro)
● #AS-114 125 mm Pad (For stick paper)

Pad Size Φ125mm(5")

● For finishing and polishing ● Lower center of gravity for improved stability. ● Easy to grip. ● Built-in power regulator.

SP-3605-A5M

M Velcro Pad

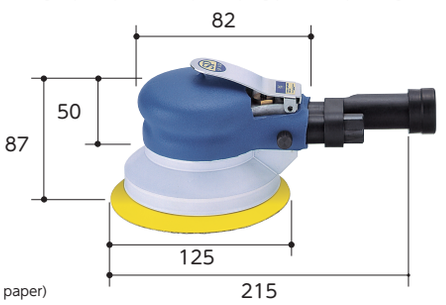

Replacement parts
● #AS-111 125 mm Pad (Velcro)
● #AS-114 125 mm Pad (For stick paper)

Pad Size Φ125mm(5")

● Lightweight. ● Easy to grip. ● Built-in power regulator.

SP-3005-5M

M Velcro Pad



Replacement parts
● #AS-111 125 mm Pad (Velcro)
● #AS-114 125 mm Pad (For stick paper)

Pad Size Φ150mm(6")

● For finishing and polishing ● Lower center of gravity for improved stability. ● Easy to grip. ● Built-in power regulator.

SP-3606-A5M

M Velcro Pad

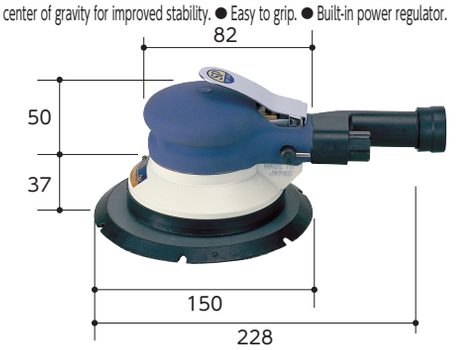

EDP	Model No.	Pad Threads	Orbit Dia. (mm)	Sandpaper type	Free Speed (min^{-1})	Overall Length (mm)	Air Consumption (m^3/min)	Hose Coupling	Net Weight (kg)	Accessories	JAN (4545695)
370114	SP-3905DF-A5M	5/16-24UNF	5	Velcro	11000	150	0.3	1/4"NPT	0.95	Hose (490311), Dust Bag (490300), Spanner (H19mm)	000561
370126	SP-3605DF-A5M	5/16-24UNF	5	Velcro	10000	215	0.3	1/4"NPT	1.23	Hose (490310), Dust Bag (490300), Spanner (H19mm)	000448
370102	SP-3006DF-5	5/16-24UNF	5	Velcro	10000	210	0.47	1/4"NPT	0.65	Hose (3006-50), Dust Bag (3006-49), Spanner (H24mm)	002343
370190	SP-3606DF-A5M	5/16-24UNF	5	Velcro	10000	228	0.3	1/4"NPT	1.3	Hose (490310), Dust Bag (490300), Spanner (H19mm)	003906
370108	SP-3905-A5M	5/16-24UNF	5	Velcro	11000	150	0.3	1/4"NPT	0.95	Spanner (H19mm)	000554
370110	SP-3605-A5M	5/16-24UNF	5	Velcro	10000	215	0.3	1/4"NPT	1.23	Spanner (H19mm)	000431
370099	SP-3005-5M	5/16-24UNF	5	Velcro	10000	140	0.47	1/4"NPT	0.6	Spanner (H24mm)	002350
370191	SP-3606-A5M	5/16-24UNF	5	Velcro	10000	228	0.3	1/4"NPT	1.2	Spanner (H19mm)	003913

Air pressure: 0.62 MPa Air hose inner dia.: 9.5 mm Rear exhaust.

DUAL ACTION SANDER

Pad Size Φ125mm(5")

● For rough polishing. ● Easy to grip. ● Built-in power regulator.

SP-3007-A10

M Velcro Pad



Replacement parts
- #AS-111 125 mm Pad (Velcro)
- #AS-114 125 mm Pad (For stick paper)

SINGLE ACTION SANDER

Pad Size Φ75mm(3")

● Lightweight ● For finishing and polishing ● Easy to grip. ● Low speed and high torque. ● Built-in power regulator.

SP-3003

M Velcro Pad



Replacement parts
- #3003-39 75 mm Pad (velcro)

DUST FREE ORBITAL SANDER

Pad Size 75×110mm

● Lightweight and compact. ● For finishing and polishing ● Easy to grip. ● Built-in power regulator. ● Dust hose and collection bag included.

SP-3900DF-A3M

M Velcro Pad

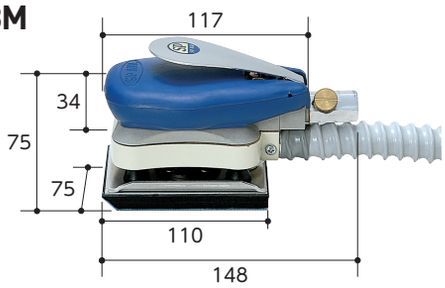

Replacement parts
- #04606120 75x110 mm Pad (Dust suction type, velcro)

Pad Size 100×180mm

● Larger pad. ● Easy to grip. ● Built-in power regulator. ● Dust hose and collection bag included.

SP-3800DF-A5M

M Velcro Pad

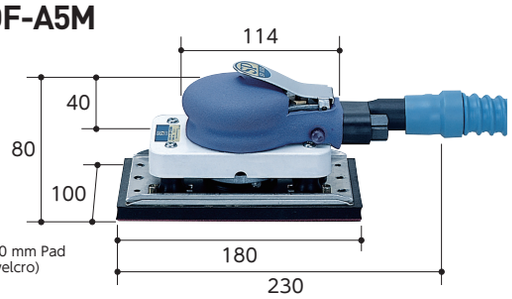

Replacement parts
- #04604503 100x180 mm Pad (Dust suction type, velcro)

ORBITAL SANDER

Pad Size 75×110mm

● Lightweight and compact. ● For finishing and polishing ● Easy to grip. ● Built-in power regulator.

SP-3900-A3M

M Velcro Pad

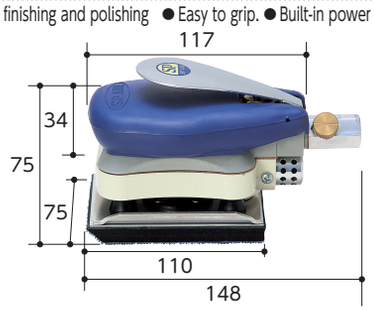

Replacement parts
- #04606120 75x110 mm Pad (Velcro)

Pad Size 100×180mm

● Larger pad. ● Easy to grip. ● Built-in power regulator.

SP-3800-A5M

M Velcro Pad

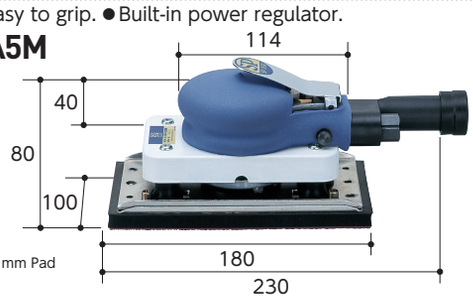

Replacement parts
- #04604501 100x180 mm Pad (Velcro)

EDP	Model No.	Pad Threads	Orbit Dia. (mm)	Sandpaper type	Free Speed (min^{-1})	Overall Length (mm)	Air Consumption (m^3/min)	Hose Coupling	Net Weight (kg)	Accessories	JAN (4545695)
370119	**SP-3007-A10**	5/16-24UNF	10	Velcro	11000	132	0.3	1/4"NPT	0.9	Spanner (H24mm)	002886
370118	**SP-3003**	5/16-24UNF	-	Velcro	2500	120	0.5	1/4"NPT	0.66	Spanner (H24mm)	002541
370117	**SP-3900DF-A3M**	-	3	Velcro	9500	148	0.3	1/4"NPT	0.86	Hose (490311), Dust Bag (490300)	000523
370125	**SP-3800DF-A5M**	-	5	Velcro	7000	230	0.3	1/4"NPT	1.57	Hose (490310), Dust Bag (490300)	000486
370103	**SP-3900-A3M**	-	3	Velcro	9500	148	0.3	1/4"NPT	0.86	-	000516
370115	**SP-3800-A5M**	-	5	Velcro	7000	230	0.3	1/4"NPT	1.57	-	000479

Air pressure: 0.62 MPa Air hose inner dia.: 9.5 mm Rear exhaust.

SANDING / POLISHING

MINI SANDER

Pad Size 50mm(2") [DUAL ACTION]

● 90 degree corner type. ● Easy to grip. ● Built-in power regulator. ● 360 degree rotating rear exhaust.

SP-7201DA

M Velcro Pad

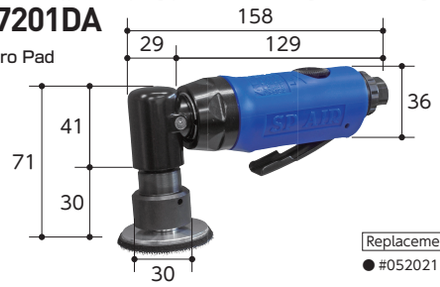

Replacement parts
● #05202110 50 mm Pad (Velcro)

Pad Size 50mm(2") [SINGLE ACTION]

● 90 degree corner type. ● Easy to grip. ● Built-in power regulator. ● 360 degree rotating rear exhaust.

SP-7201G

M Velcro Pad



Replacement parts
● #05202110 50 mm Pad (Velcro)

Pad Size 70mm(3") [DUAL ACTION]

● Lightweight ● Variable speed trigger. ● Built-in power regulator (4-step adjustment)

SP-1340DA

M Velcro Pad



Replacement parts
● #05315612 70 mm Pad (Velcro)

Pad Size 70mm(3") [SINGLE ACTION]

● Lightweight ● Low speed and high torque. ● Variable speed trigger. ● Built-in power regulator (4-step adjustment)

SP-1331L

M Velcro Pad



Replacement parts
● #05315612 70 mm Pad (Velcro)

Option
● #40100920 Suport handle grip

Pad Size 100mm(4") [SINGLE ACTION]

● High speed. ● Rubber grip. ● Silencer.

SP-1350



POLISHER

Pad Size 70/125mm(3"/5") [SINGLE ACTION]

● 90 degree corner type. ● Lower center of gravity for improved stability. ● Low speed rotation and high torque. ● Built-in power regulator. ● With bar grip. ● 360 degree rotating rear exhaust

SP-7500AH-P

M Velcro Pad



Replacement parts
● #40100820 125 mm Pad (Velcro)
● #AS-111 70 mm Pad (Velcro)

Pad Size 125mm(5") [SINGLE ACTION]

● 120 degree corner type. ● Low speed rotation and high torque. ● Built-in power regulator. ● With anti-vibration grip.

SP-1508AH-P

M Velcro Pad



Replacement parts
● #AS-111 70 mm Pad (Velcro)

Pad Size 75×110mm [Window Polisher]

● For polishing window glass. ● Special pad. ● Built-in power regulator.

SP-3900P

M Velcro Pad





Replacement parts
● #00000308 75x110 Pad (Velcro)

EDP	Model No.	Pad Threads	Orbit Dia. (mm)	Install Method	Free Speed (min^{-1})	Overall Length (mm)	Air Consumption (m^3/min)	Hose Coupling	Net Weight (kg)	Accessories	JAN (4545695)
370105	**SP-7201DA**	M6	3	Velcro	13000	158	0.3	1/4"NPT	0.6	Ø50mm Velcro Pad, Pad Fixing Bar	001483
370104	**SP-7201G**	M6	-	Velcro	13000	158	0.3	1/4"NPT	0.53	Ø50mm Velcro Pad, Uni top mini, Spanner (H11mm)	001476
370111	**SP-1340DA**	M6	2	Velcro	12000	125	0.3	1/4"NPT	0.67	Ø70mm Velcro Pad, Spanner (H17mm, H11mm), Bolt	000714
370112	**SP-1331L**	M6	-	Velcro	3000	145	0.3	1/4"NPT	0.7	Ø70mm Velcro Pad, Spanner (H11mm)x2, Bolt	000707
370121	**SP-1350**	M10×1.5	-	Disc Nut	15000	124	0.76	1/4"NPT	0.96	Ø75mm Sanding Pad, Spanner, Lock bar	001599
370116	**SP-7500AH-P**	5/16-24UNF	-	Velcro	1800	200	0.3	1/4"NPT	1.2	Ø70mm Velcro Pad, Ø125mm Velcro Pad, Regulator, Spanner (H17mm), Allen key (H14mm)	000974
370123	**SP-1508AH-P**	5/16-24UNF	-	Velcro	2500	180	0.66	1/4"NPT	1.2	Ø125 Velcro Pad, Regulator, Ø150 Urethan Pad, Ø150 Wool Pad, Comfort Grip, Spanner (H11mm)	000776
370124	**SP-3900P**	-	3	Velcro	9500	148	0.4	1/4"NPT	0.86	Buffing Form Pad x2	000790

Air pressure: 0.62 MPa Air hose inner dia.: 9.5 mm Rear exhaust.

BELT SANDER

Belt Size 10/12×330mm

● Arm Stopper for easy replacement of the sanding belt. ● Adjustable Arm Angle with Allen key

SP-1370A

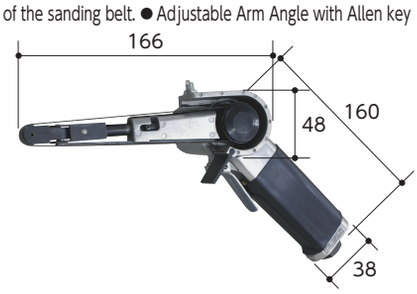



Replacement parts
● #09601250 Idol Pulley ASSY

Belt Size 20×520mm

● Arm Stopper for easy replacement of the sanding belt. ● Adjustable Arm Angle with Allen key

SP-1380

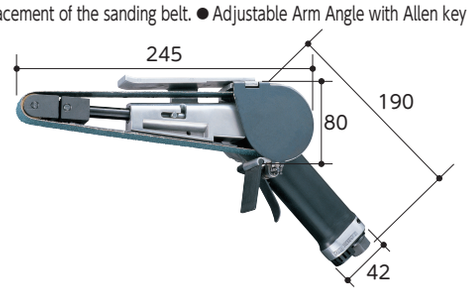

EDP	Model No.	Free Speed (min⁻¹)	Overall Length (mm)	Air Consumption (m³/min)	Hose Coupling	Net Weight (kg)	Accessories	JAN (4545695)
370097	**SP-1370A**	16000	275	0.4	1/4"NPT	0.8	Belt (#60)	002107
370100	**SP-1380**	17000	365	0.5	1/4"NPT	1.4	Belt (#60), Allen key (H4mm)	000646

Air pressure: 0.62 MPa Air hose inner dia.: 9.5 mm Rear exhaust.

MICRO GRINDER

Collet Size 3mm

● Lightweight. ● Throttle switch. ● Urethane covered cushion grip. ● For finishing of small parts. ● With flexible hose 1.5 m

SP-1900



PUNCH/FLANGE TOOL

Punch/Flange Punching Capacity (mm) φ5.5 (Steel) Flange Thickness (mm) 1.5 (Steel)

● Punching and flanging in one machine. ● 360 degree rotating head. ● Lever type

SP-1600B

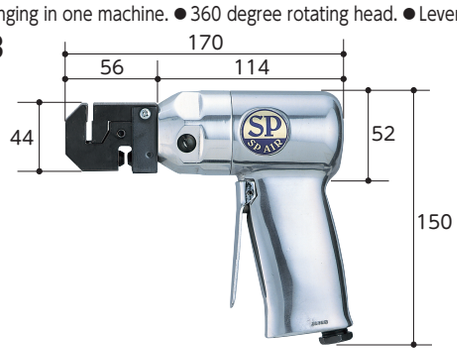

EDP	Model No.	Grip Dia. (mm)	Install method	Free Speed (min⁻¹)	Overall Length (mm)	Air Consumption (m³/min)	Hose Coupling	Net Weight (kg)	Accessories	JAN (4545695)
370095	**SP-1900**	17	Collet Nut	70000	156	0.14	1/4"NPT	0.35	Spanner (H9mm)	003500

Air pressure: 0.62 MPa Air hose inner dia.: 9.5mm Rear exhaust.

EDP	Model No.	Overall Length (mm)	Air Consumption (m³/min)	Hose Coupling	Net Weight (kg)	JAN (4545695)
370161	**SP-1600B**	170	0.3	1/4"NPT	1	000837

Air pressure: 0.62 MPa Air hose inner dia.: 9.5 mm Rear exhaust.

replacement parts

SANDING PAD



EDP	PART NUMBER	SPECIFICATION	JAN (4545695)
370314	**AS-111**	125 mm Pad/Velcro (ASP-3005)	600587
370333	**AS-114**	125 mm Pad/for Stick paper	001034
370331	**AS-113**	125 mm Pad w/Dust suction hole/Velcro	001010
370332	**AS-112**	125 mm Pad w/Dust suction hole/for Stick paper	001027
370319	**ASP-3006**	125 mm Pad/Dust suction hole/Velcro	600822
370343	**MSP-506**	50 mm 6 mm Collet chuck/Velcro	-

SANDING PAD

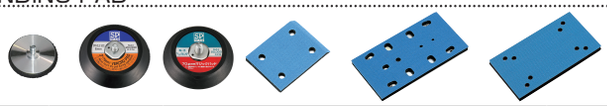

EDP	PART NUMBER	SPECIFICATION	JAN (4545695)
370334	**05202110**	50 mm M6 Thread/Velcro	001041
370335	**05315612**	70 mm M6 Thread/Velcro	001058
370336	**40100820**	70 mm 5/16-24UNF/Velcro	001065
882938	**04606120**	75×110 mm w/Dust suction hole/Velcro (AS-131/129)	-
883819	**04604503**	100×180 mm w/Dust suction hole/Velcro (AS-127)	-
883818	**04604501**	100×180 mm w/Dust suction hole/Velcro (AS-125)	-

DUST HOSE AND DUST COLLECTION BAG

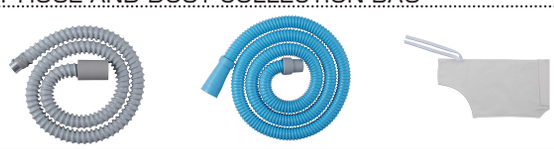

EDP	PART NUMBER	SPECIFICATION	APPLICABLE MODELS
370328	**490311**	19mm dia. ×1 m	SP-3605DF-A5M、3800DF-A5M
370329	**490310**	25mm dia. ×2 m	SP-3905DF-A5M、3900DF-A3M
370327	**490300**	195mm×395mm	3905DF-A5M、3605DF-A5M、3900DF-A3M、3800DF-A5M

BUFF

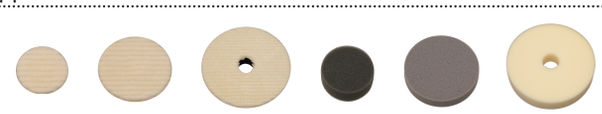

EDP	PART NUMBER	SPECIFICATION	JAN (4545695)
370345	**WBF50**	50 mm Wool buff/Velcro	-
370347	**WBF75**	75 mm Wool buff/Velcro	-
370349	**WBF150**	150 mm Wool buff/Velcro	-
370344	**SBF50**	50 mm Sponge buff/Velcro	-
370346	**SBF75**	75 mm Sponge buff/Velcro	-
370348	**SBF150**	150 mm Wool buff/Velcro	-

GRINDING

ANGLE GRINDER

Disc Size 50mm/2" [ROTARY GRIP]

● Mini type. ● Throttle switch for continuous operation. ● For small workpieces in tight spaces.

SP-6252GCA



Disc Size 100mm/4" [ROTARY GRIP]

● Built-in governor mechanism. ● Throttle switch for continuous operation. ● With handle grip

SP-6254GCA



Disc Size 100mm/4" [LEVER TYPE]

● Built-in governor mechanism. ● Safety lever. ● With handle grip

SP-1254

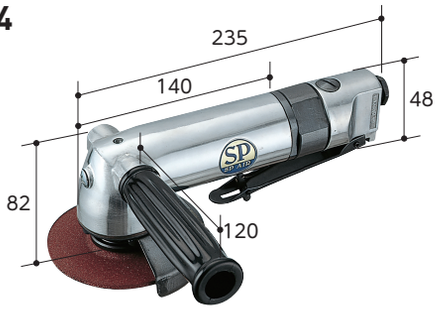

Disc Size 100mm/4" [ROTARY GRIP]

● Built-in governor mechanism. ● Throttle switch for continuous operation. ● With handle grip

SP-1254G

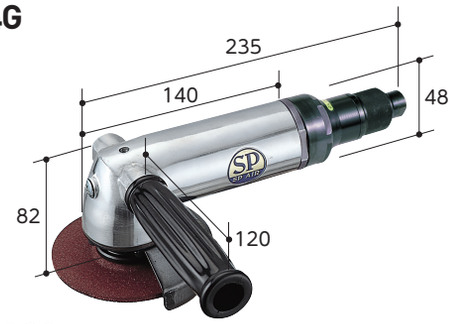

Disc Size 180mm/7" [ROTARY GRIP]

● Built-in governor mechanism. ● Throttle switch for continuous operation.
● With handle grip. ● 360 degree rotating rear exhaust.

SP-1261G

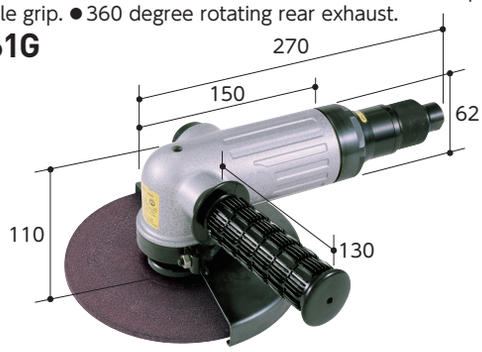

Disc Size 180mm/7" [LEVER TYPE]

● Built-in governor mechanism. ● Safety lever. ● With handle grip

SP-1261L14

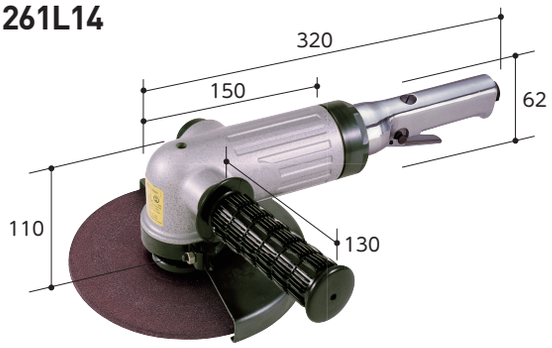

LONG DISC GRINDER

Disc Size 100mm/4" [LEVER TYPE]

● Long shaft - Easy to hold. ● Stopper pin for fixing the rotating shaft
● Urethane covered cushion grip. ● Safety lever. ● Built-in power regulator.
● 360 degree rotating rear exhaust.

SP-7234B



EDP	Model No.	Thread (mm)	Install method	Free Speed (min^{-1})	Overall Length (mm)	Air Consumption (m^3/min)	Hose Coupling	Net Weight (kg)	Accessories	JAN (4545695)
370139	**SP-6252GCA**	-	FrangeBolt M5	15000	157	0.4	1/4"NPT	0.62	Spanner (H19mm), Allen key (H3mm, H5mm)	003043
370145	**SP-6254GCA**	-	FrangeBolt M5	13500	210	0.55	3/8"NPT	1.8	Spanner (H19mm), Allen key (H3mm, H5mm)	003258
370144	**SP-1254**	M10×1.5	Disc Nut	12000	235	0.6	1/4"NPT	1.7	Spanner (H10mm), Pin Spanner	000875
370142	**SP-1254G**	M10×1.5	Disc Nut	12000	235	0.6	1/4"NPT	1.7	Spanner (H10mm), Pin Spanner	000882
370141	**SP-1261G**	M16×2	Disc Nut	7500	270	0.8	3/8"NPT	3.8	Spanner (H17mm), Pin Spanner	000929
370177	**SP-1261L14**	M14×2	Disc Nut	7500	320	0.8	3/8"NPT	3.8	Spanner (H17mm), Pin Spanner	003883
370140	**SP-7234B**	M10×1.5	Disc Nut	14000	350	0.9	1/4"NPT	1.33	Disc Spanner, Allen key (H4mm)	003388

Air pressure: 0.62 MPa Air hose inner dia.: 9.5mm Grip side exhaust (SP-6252GCA, SP-6254GCA, SP-1261G, SP-1261L14), Grip bottom exhaust (SP-1254, SP-1254G), Rear exhaust (SP-7234B).

DIE GRINDER

Collet Size 6mm

●Low speed and high torque. ●Lever type. ●Urethane covered cushion grip.
●Built-in power regulator. ●360 degree rotating rear exhaust.

SP-7203



Option
● #02000241 3 mm Collet chuck

Collet Size 6mm

●Safety lever. ●Urethane covered cushion grip. ●Built-in power regulator.
●360 degree rotating rear exhaust port.

SP-7200



Option
● #02000241 3 mm Collet chuck

Collet Size 6mm

●90 degree corner type. ●Safety lever. ●Urethane covered cushion grip.
●Built-in power regulator. ●360 degree rotating rear exhaust.

SP-7201

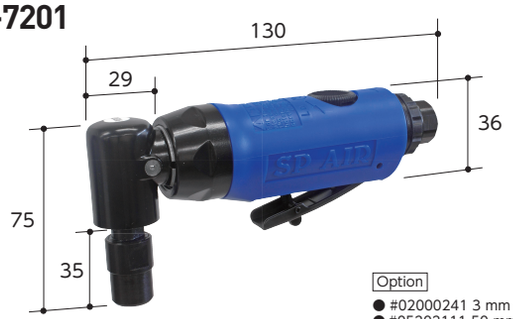

Option
● #02000241 3 mm Collet chuck
● #05202111 50 mm Pad (Velcro)

Collet Size 6mm [ROTATIONAL HEAD]

●90 degree corner type. ●Rotating head (fixed at 90 degree each) ●Safety lever.
●Urethane covered cushion grip. ●Built-in power regulator. ●360 degree rotating rear exhaust port.

SP-7201RH



Option
● #02000241 3 mm Collet chuck
● #05202111 50 mm Pad (Velcro)

Collet Size 6mm

●120 degree corner type. ●Safety lever. ●Urethane covered cushion grip.
●Built-in power regulator. ●360 degree rotating rear exhaust.

SP-7202



Option
● #02000241 3 mm Collet chuck
● #05202111 50 mm Pad (Velcro)

Collet Size 3mm [ROTARY GRIP]

●Long tip type. ●Throttle switch for continuous operation.
●For finishing molds and deburring.

SP-6210GA

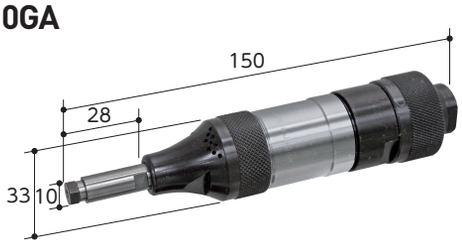

Collet Size 6mm

●Long tip type. ●Throttle switch for continuous operation.
●Max. dia. 25 mm (mounted wheel) ●Max. dia. 12.7 mm (carbide bar)

SP-6211GA

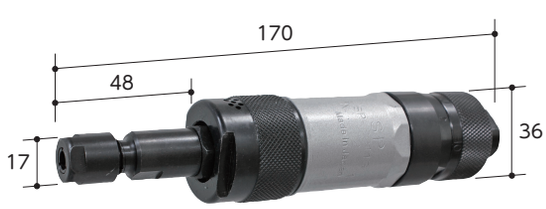

Collet Size 6mm

●High power. ●Throttle switch for continuous operation.
●Max. dia. 32 mm (Flap wheel). ●For finishing molds and deburring.

SP-6213GA

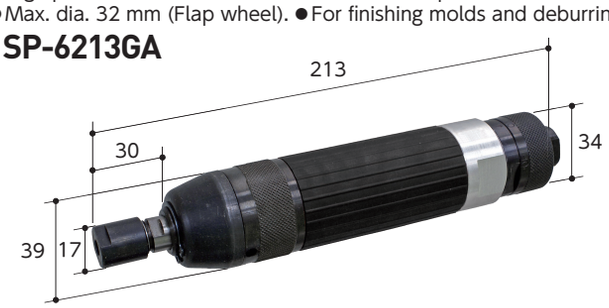

EDP	Model No.	Grip Dia. (mm)	Install method	Free Speed (min^{-1})	Overall Length (mm)	Air Consumption (m^3/min)	Hose Coupling	Net Weight (kg)	Accessories	JAN (4545695)
370093	**SP-7203**	40	Collet Nut	5500	165	0.2	1/4"NPT	0.54	Spanner (H19mm, H14mm)	003708
370082	**SP-7200**	36	Collet Nut	23000	153	0.2	1/4"NPT	0.41	Spanner (H17mm, H11mm)	000332
370089	**SP-7201**	36	Collet Nut	20000	130	0.2	1/4"NPT	0.55	Spanner (H17mm, H11mm)	000349
370086	**SP-7201RH**	41	Collet Nut	20000	160	0.2	1/4"NPT	0.55	Spanner (H17mm, H11mm)	001643
370088	**SP-7202**	36	Collet Nut	20000	194	0.2	1/4"NPT	0.56	Spanner (H17mm, H11mm)	000356
370091	**SP-6210GA**	34	Collet Nut	30000	150	0.25	1/4"NPT	0.44	Spanner (H8mm), Open End Wrench (H8mm)	003265
370087	**SP-6211GA**	36	Collet Nut	24000	170	0.4	1/4"NPT	0.4	Spanner (H15mm, H14mm)	003272
370096	**SP-6213GA**	34	Collet Nut	18000	213	0.45	1/4"NPT	0.45	Spanner (H14mm, H12mm)	003296

Air pressure: 0.62 MPa Air hose inner dia.: 9.5mm (6mm:SP-6210GA), (8mm:SP-6211GA,SP-6213GA), (10mm:SP-6203GA) Rear exhaust, Front side exhaust (SP-6210GA, SP-6211GA, SP-6213GA).

GRINDING

DIE GRINDER

Collet Size Φ6mm

●Lever type. ●Built-in power regulator.

SP-1200

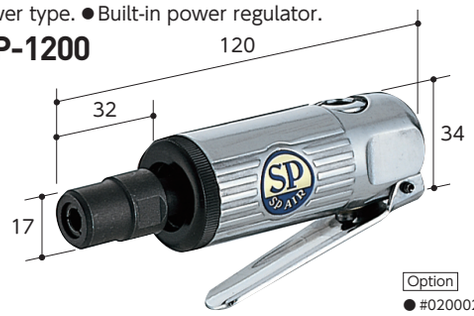

Option
● #02000241 3 mm Collet chuck

Collet Size Φ6mm [90 degree]

●Low speed and high torque. ●Lever type. ●Built-in power regulator.

SP-1523

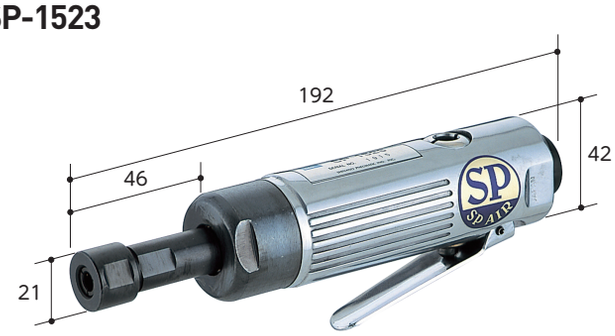

Collet Size Φ6mm [90 degree]

●Lever type. ●Built-in power regulator.

SP-1220

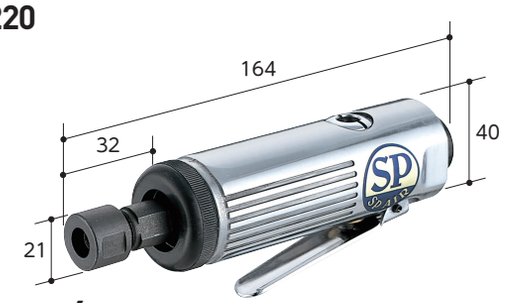

Collet Size Φ6mm

●90 degree corner type ●Lever type. ●Built-in power regulator.

SP-1200AH

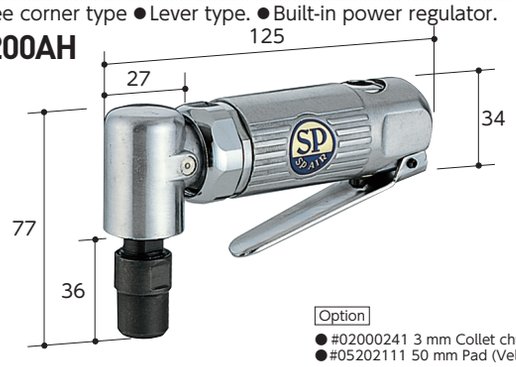

Option
● #02000241 3 mm Collet chuck
● #05202111 50 mm Pad (Velcro)

LONG DIE GRINDER

Collet Size Φ6mm

●Long type ●Throttle switch for continuous operation. ●For finishing the inside of pipes and deburring.

SP-6203GA

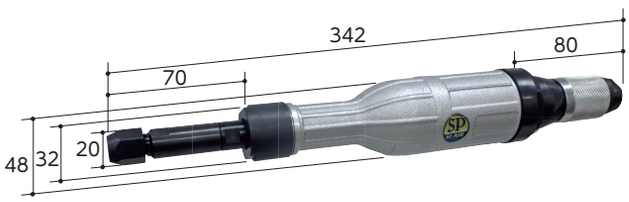

EDP	Model No.	Grip Dia. (mm)	Install Method	Free Speed (min^{-1})	Overall Length (mm)	Air Consumption (m^3/min)	Hose Coupling	Net Weight (kg)	Accessories	JAN (4545695)
370085	**SP-1200**	34	Collet Nut	28000	120	0.2	1/4"NPT	0.3	Spanner (H17mm, H11mm)	000288
370094	**SP-1220**	40	Collet Nut	23000	164	0.4	1/4"NPT	0.56	Spanner (H19mm, H14mm)	000318
370090	**SP-1523**	42	Collet Nut	3800	192	0.4	1/4"NPT	0.72	Spanner (H19mm, H14mm)	000325
370084	**SP-1200AH**	34	Collet Nut	21000	125	0.2	1/4"NPT	0.45	Spanner (H17mm, H11mm)	000295
370092	**SP-6203GA**	48	Collet Nut	14600	342	0.55	3/8"NPT	1.26	Spanner (H17mm, H11mm)	003302

Air pressure: 0.62 MPa Air hose inner dia.: 9.5mm (10mm:SP-6203GA) Front exhaust (SP-1200, SP-1200AH), Rear exhaust (SP-1200, SP-1523), Side exhaust (SP-6203GA).

ONE POINT

SP-7610

The high-powered, unstoppable reciprocating saw

The reduced vibration from the Air Motor and Gear driven system of the reciprocating air saw allow for a smoother, more comfortable cut.The blade is mounted on the end of the saw and the power is transmitted to the blade.

- 5300 cycle per minites and 12 mm stroke for fast cutting.
- The blade is very stable and the cut is clean and distortion free.
- Two screws hold the blade.
- Built-in air regulator adjusts the cutting speed.
- 360 degree rotating rear exhaust.
- Safety lever to prevent accidental starting.

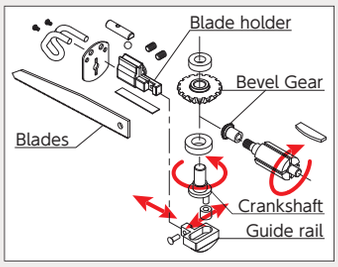

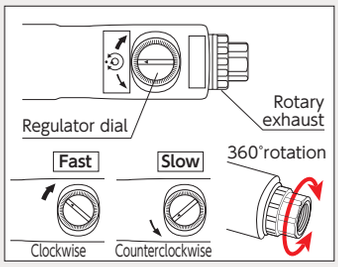

RECIPROCATING SAW

Cutting Capacity 4mm (Steel) [RECIPROCATING SAW]

● Lightweight. ● High power. ● Urethane covered cushion grip. ● Safety lever. ● Built-in power regulator. ● 360 degree rotating rear exhaust. ● Secure fixing blade with screw hole.

SP-7610

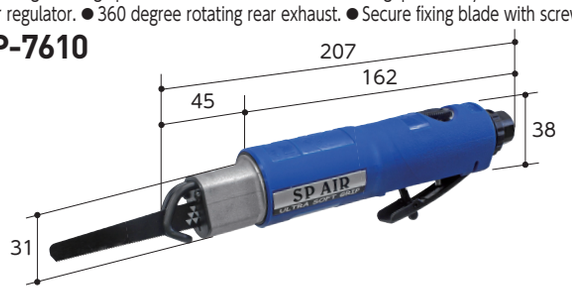

Cutting Capacity 2mm (Steel) [RECIPROCATING SAW]

● Lightweight. ● High power. ● Urethane covered cushion grip. ● Safety lever. ● Built-in power regulator. ● 360 degree rotating rear exhaust. ● Secure fixing blade with screw hole.

SP-7620

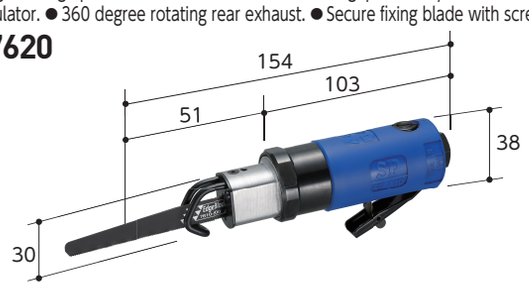

Cutting Capacity 1.5mm (Steel) [HIGH SPEED TYPE]

● Lightweight. ● High speed type. ● Safety lever. ● Secure fixing blade with screw hole.

SP-1720

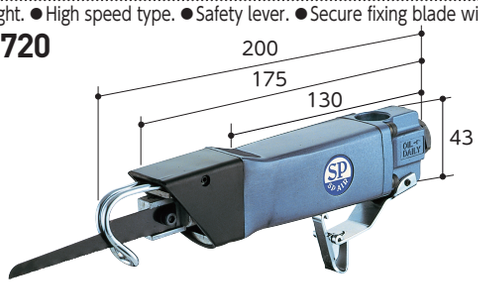

Cutting Capacity 1.5mm (Steel) [LOW SPEED TYPE]

● Rubber cover grip. ● Safety lever. ● Dust hose included. ● Suitable for dia. 5 mm files.

SP-1730

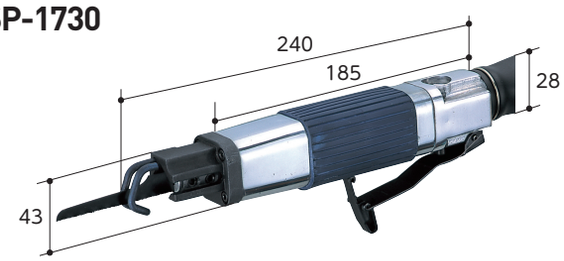

Air Saw Blades



EDP	PART NUMBER	SPECIFICATION	JAN (4545695)
370324	**SP-7610-200**	24 teeth Bimetal (for HTSS)	000709
370315	**AS-170**	32 teeth Bimetal(for Steel)	600020
370316	**AS-171**	24 teeth Bimetal(for Aluminum)	600570

FILE

Rasp Φ5mm [MINI TYPE]

● Light weight. ● Low speed and high torque. ● Rubber covered grip. ● Safety lever

SP-1700F



EDP	Model No.	Grip Dia. (mm)	Stroke (mm)	Install Method	Free Speed (min^{-1})	Overall Length (mm)	Air Consumption (m^3/min)	Hose Coupling	Net Weight (kg)	Accessories	JAN (4545695)
370134	**SP-7610**	40	12	Set screw H3mm	5300	207	0.5	1/4"NPT	0.6	Blade (7610-200), Allen key (H3mm)	002435
370170	**SP-7620**	38	6	Set screw H3mm	11000	154	0.5	1/4"NPT	0.6	Blade (7610-200), Allen key (H3mm)	003876
370135	**SP-1720**	43	7	Set screw H3mm	11000	200	0.32	1/4"NPT	0.48	Blade (32T), Allen key (H3mm, H2mm)	000806
370136	**SP-1730**	43	9	Set screw H3mm	5000	240	0.3	1/4"NPT	1.15	Blade (32T), Allen key (H3mm)	000813
370137	**SP-1700F**	28	5	Set screw H3mm	4500	180	0.3	1/4"NPT	0.42	Files (Round, Flat, triangular), Allen key (H3mm)	000820

Air pressure: 0.62 MPa Air hose inner dia.: 9.5 mm Rear exhaust.

ONE POINT

SP-7231/7234

Slender/lightweight, cut-off tool for straight cutting

Slender and lightweight compared to ordinary disc grinders for improved workability.
The cutting speed is much faster than with air saws.

- Safety cover completely covering half of the wheel, adjustable position.
- Safety lever to prevent accidental starting.
- 360 degree rotating rear exhaust

SP-7234

- Spindle-lock button enables to change accessories easily.
- Long shaft for deep work, easy to hold with hands.

⚠Warning: For safety reasons, always use a grinding wheel with a diameter of 100 mm, thick of 1 mm, hole of 10 mm.



SP-7231/SP7231AWC

- 3-position Flex head : 22.5 degree up, straight or 22.5 degree down

⚠Warning: For safety reasons, always use a grinding wheel with a diameter of 76 mm, thick of 1 mm, hole of 10 mm.

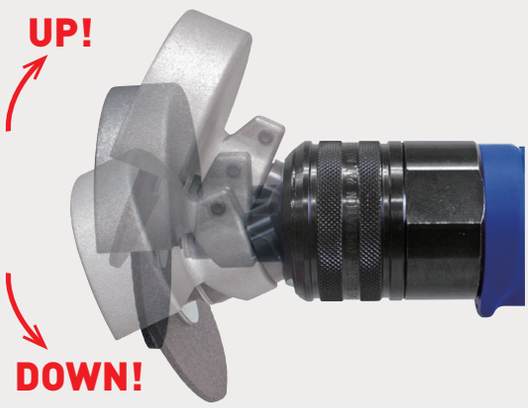

CUT-OFF TOOL

Disc Size 75mm/3" [FLEXIBLE HEAD]

- 3-position Flex Head. ● Urethane covered cushion grip. ● Safety lever.
- Built-in power regulator. ● 360 degree rotating rear exhaust port.

SP-7231

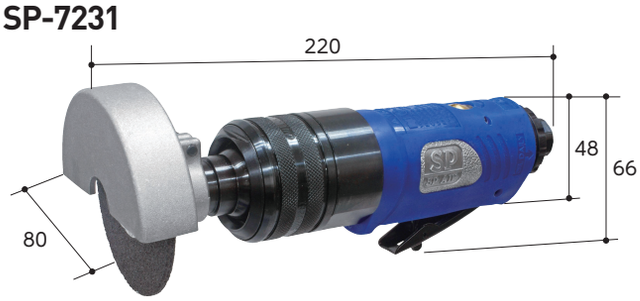

Disc Size 75mm/3" [W/ ADJUSTABLE COVER]

- Adjustable cut depth: minimum 3mm. ● 3-position Flex Head. ● Urethane covered cushion grip.
- Safety lever. ● Built-in power regulator. ● 360 degree rotating rear exhaust port

SP-7231AWC

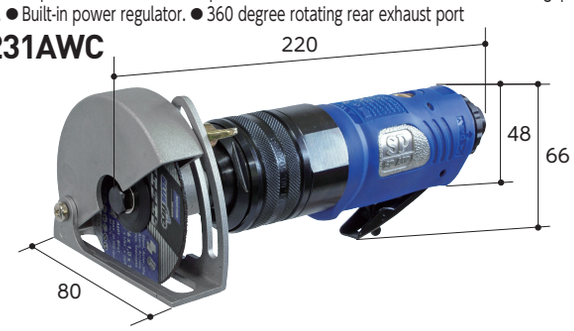

Disc Size 100mm/4" [LONG TYPE]

- Long shaft - Easy to hold. ● Stopper pin for fixing the rotating shaft ● Urethane covered cushion grip.
- Safety lever. ● Built-in power regulator. ● 360 degree rotating rear exhaust port

SP-7234



CUTTING WHEEL





EDP	PART NUMBER	SPECIFICATION	APPLICABLE MODELS	QUANTITY	JAN (4545695)
370326	**SP-7231-76**	76 mm dia. ×1 mm thickness ×10 mm hole	SP-7231	5	000976
370325	**SP-7234-100**	100 mm dia. ×1 mm thickness ×10 mm hole	SP-7234	10	000716

EDP	Model No.	Thread (mm)	Install method	Free Speed (min^{-1})	Overall Length (mm)	Air Consumption (m^3/min)	Hose Coupling	Net Weight (kg)	Accessories	JAN (4545695)
370132	**SP-7231**	-	Hex bolt H11mm	18000	220	0.8	1/4"NPT	1.2	Spanner (H11mm)	003197
370133	**SP-7231AWC**	-	Hex bolt H11mm	18000	220	0.8	1/4"NPT	1.2	Spanner (H11mm)	003692
370131	**SP-7234**	M10×1.5	Disc Nut	14000	350	0.85	1/4"NPT	1.5	Disc Spanner, Allen key (H4mm)	003074

Air pressure: 0.62 MPa Air hose inner dia.: 9.5 mm Rear exhaust.

HAMMER

Chisel Size 10mm

● Variable speed trigger. ● Built-in regulator.

SP-1410



Chisel Size 10mm [HAMMER KIT SET]

● SP-1410 and 4 chisels (Flat, Sheet metal, Spot welder and Taper punch) in PB case.

SP-1410-K



EDP	Model No.	Install method	Free Speed (bpm)	Overall Length (mm)	Air Consumption (m^3/min)	Hose Coupling	Net Weight (kg)	Accessories	JAN (4545695)
370160	**SP-1410**	Quick change retainer	3000	216	0.3	1/4"NPT	1.65	-	000851
370162	**SP-1410-K**	Quick change retainer	3000	216	0.3	1/4"NPT	1.65	4 chisels (Flat, Sheet metal, Spot welder and Taper punch) in PB case.	000868

Air pressure: 0.62 MPa Air hose inner dia.: 9.5 mm

CHISEL



EDP	PART NUMBER	SPECIFICATION
370339	**CH-807**	Sheet metal chisel 10×150 mm
370338	**CH-810**	Flat chisel 10×180 mm
370341	**CH-812**	Tapered punch chisel 10×170 mm
370340	**CH-815**	Spot welder chisel 10×150 mm

NEEDLE SCALER

Needle Size Φ3mm×180mm [PISTOL TYPE]

● Lever type. ● For paint removal, spatter removal and slag removal.

SP-1482



Needle Size Φ3mm×180mm

● Lever type. ● For spatter removal, rust removal and shell removal.

SP-1460

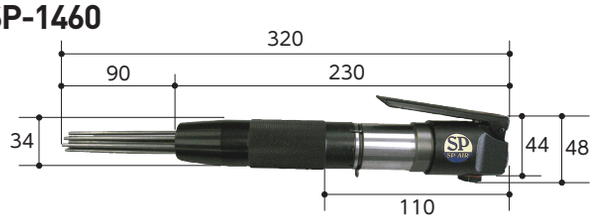

Needle Size Φ3mm×180mm

● High power. ● Lever type. ● For spatter removal, rust removal and shell removal.

SP-1470

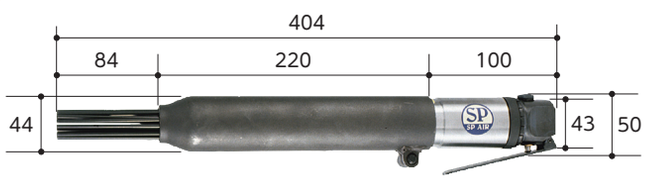

EDP	Model No.	Needles	Piston Dia. (mm)	Stroke (mm)	Free Speed (bpm)	Overall Length (mm)	Air Consumption (m^3/min)	Hose Coupling	Net Weight (kg)	Accessories	JAN (4545695)
370166	**SP-1482**	19 pcs.	20	34	4200	260	0.13	1/4"NPT	2.5	Needle 19 pcs.	003227
370159	**SP-1460**	12 pcs.	20	12	5000	230	0.2	1/4"NPT	1.26	Needle 12pcs.	002084
370167	**SP-1470**	19 pcs.	25	22	4000	320	0.4	1/4"NPT	2.6	Needle 19 pcs.	001186

Air pressure: 0.62 MPa Air hose inner dia.: 9.5 mm

FLUX CHIPPER

CHIPPER Shank Φ11mm [STRAIGHT]

● Ideal for deburring, rust and spatter removal. ● Lever type. ● Cap lock chucking.

SP-1460FC



CHIPPER Shank SQ12.7mm [STRAIGHT]

● High power type. ● Ideal for deburring, rust and spatter removal. ● Lever type. ● Ball lock chucking

SP-1470FC

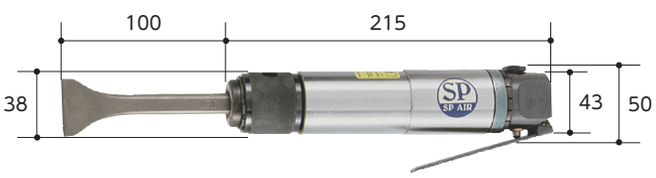

EDP	Model No.	Chisel Shape	Piston Dia. (mm)	Stroke (mm)	Free Speed (bpm)	Overall Length (mm)	Air Consumption (m^3/min)	Hose Coupling	Net Weight (kg)	Accessories	JAN (4545695)
370163	**SP-1460FC**	Flat	20	12	5000	175	0.2	1/4"NPT	0.9	Flat Chisel	002091
370165	**SP-1470FC**	Bent Flat	25	22	4000	215	0.4	1/4"NPT	1.7	Bent Flat Chisel	002077

Air pressure: 0.62 MPa Air hose inner dia.: 9.5 mm Front exhaust.

BEVELER

MINI BEVELER

1.5R/1.5C

●Palm size ●Air cooling system (Patented). ●Triangular cutting tip for 3 times use. ●Easy to adjust cutting depth with graduated flange.

SP-7252F

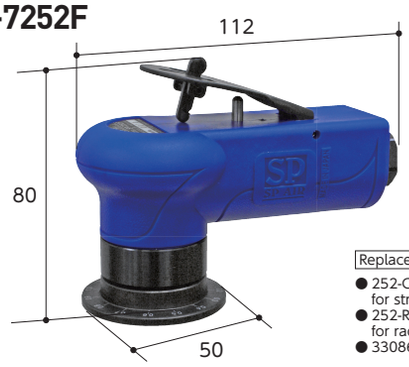

Replacement parts
- 252-C1.5 Cutting blades for straight chamfer (up to 1.5 mm)
- 252-R1.5 Cutting blades for radius chamfer (up to 1.5 mm)
- 330860 Guide roller

SP-7252F-2



Replacement parts
- 252-C1.5 Cutting blades for straight chamfer (up to 2 mm)
- 252-R2 Cutting bladesfor radius chamfer (up to 2 mm)
- 330860 Guide roller

1.5R/2R

●Palm size ●Air cooling system (Patented). ●Triangular cutting tip for 3 times use. ●Easy to adjust cutting depth with graduated flange.

SP-7252FR

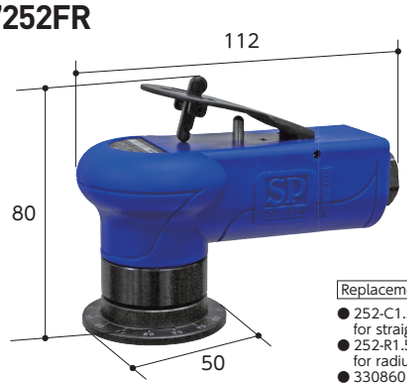

Replacement parts
- 252-C1.5 Cutting blades for straight chamfer (up to 1.5 mm)
- 252-R1.5 Cutting blades for radius chamfer (up to 1.5 mm)
- 330860 Guide roller

SP-7252FR-2



Replacement parts
- 252-C1.5 Cutting blades for straight chamfer (up to 2 mm)
- 252-R2 Cutting blades for radius chamfer (up to 2 mm)
- 330860 Guide roller

EDP	Model No.	Capacity (mm)	Min. Diameter (mm)	Min. Thickness (mm)	Min. Depth (mm)	Free Speed (min^{-1})	Overall Length (mm)	Air Consumption (m^3/min)	Hose Coupling	Net Weight (kg)	Accessories	JAN (4545695)
370146	**SP-7252F**	~C1.5	6.8	2.5	7.5	23000	112	0.2	1/4"NPT	0.4	Cutter (252-C1.5)x3, Torx Wrench (T8), Allen key (H2mm), Spanner (H4mm)	002589
370152	**SP-7252F-2**	C0.5~2	6.8	2.5	7.5	23000	112	0.2	1/4"NPT	0.4	Cutter (252-C1.5)x3, Torx Wrench (T8), Allen key (H2mm), Spanner (H4mm)	003623
370148	**SP-7252FR**	R1.5	6.8	2.5	7.5	23000	112	0.2	1/4"NPT	0.4	Cutter (252-R1.5)x3, Torx Wrench (T8), Allen key (H2mm), Spanner (H4mm)	002596
370151	**SP-7252FR-2**	R2	6.8	2.5	7.5	23000	112	0.2	1/4"NPT	0.4	Cutter (252-R2)x3, Torx Wrench (T8), Allen key (H2mm), Spanner (H4mm)	003630

Air pressure: 0.62 MPa Air hose inner dia.: 9.5 mm Front exhaust.

10 PC. CUTTER SET FOR BEVELER

252-C1.5

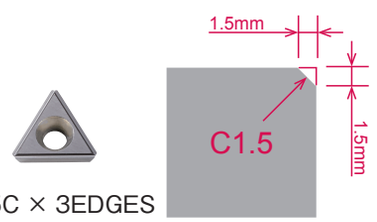

1.5C × 3EDGES



252-R1.5



1.5R × 3EDGES



252-R2



2R × 3EDGES



EDP	Model No.	SPECIFICATION	EDGES	MATERIAL	GUIDE ROLLER	APPLICABLE MODELS	JAN (4545695)
370311	**252-C1.5**	Positive cutter for Straight chamfer 1.5 mm / 2 mm	3	Cermet	330860	7252F, 7252F-2, 7252FR, 7252FR-2	600662
370312	**252-R1.5**	Positive cutter for Radius chamfer 1.5 mm	3	Cermet	330860	7252F, 7252FR	600679
370313	**252-R2**	Positive cutter for Radius chamfer 2 mm	3	Cermet	330860	7252F-2, 7252FR-2	600921

ONE POINT

SP-7252 SERIES | SP-1250/1251 SERIES

SP-7252 SERIES

Palm size

Compact length 110mm and lightweight 380g only.
Composite body prevents from getting your hands cold

⚠Caution: Chips may scatter.
Always wear protective gloves.



Air cooling system (Patented)

Cooling the grinding surface to prevent sticky chips.
Blowing dusts away for efficient work.

⚠Caution: Chips may scatter.
Always wear protective glasses.



How to operate

1. The tools should be oparated to the same direction as the cutter is turning.
2. Make sure that the tool is operating first and slowly put it against the work piece.

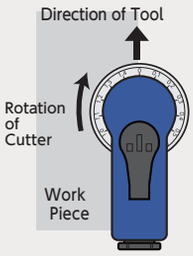

⚠Caution: Putting the tool against the work piece prior to starting operation causes the damage to the cutters and injuries to the user.

SP-7252/1250/1251 SERIES Chamferable material method

SP-7252 SERIES

Min. thickness: 2.5mm

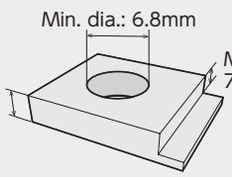

SP-1250/1251 SERIES

Min. thickness: 6mm

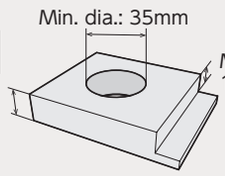

BEVELER

R 3.5R/2.5R/3C

● PSPC Standard compliant. ● Easy-to-use 120 degree vertical handle. ● Throttle switch for continuous operation. ● Adjustable flange height for different chamfering sizes.

SP-1251BV

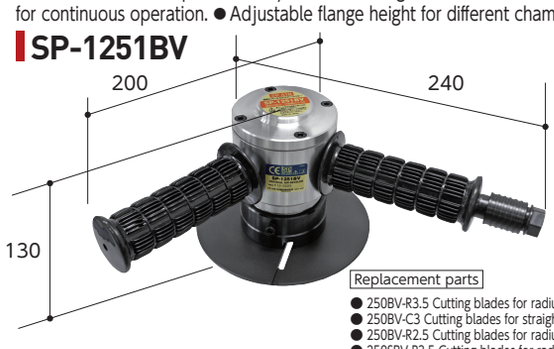

Replacement parts
- 250BV-R3.5 Cutting blades for radius chamfer (2.5 mm)
- 250BV-C3 Cutting blades for straight chamfer (3 mm)
- 250BV-R2.5 Cutting blades for radius chamfer (2.5 mm)
- 250SBV-R3.5 Cutting blades for radius chamfer (3.5 mm)
- 250BV-R4 Cutting blades for radius/straight chamfer (4 mm)
- R3.5-8 Guide roller

C 5C

● PSPC Standard compliant. ● High power type. ● Easy-to-use 120 degree vertical handle. ● Throttle switch for continuous operation. ● Adjustable flange height for different chamfering sizes.

SP-1251HBV



Replacement parts
- 250BV-C5 Cutting blades for straight chamfer (5 mm)
- 250BV-C3 Cutting blades for straight chamfer (3 mm)
- 250BV-R2.5 Cutting blades for radius chamfer (2.5 mm)
- 250BV-R3.5 Cutting blades for radius chamfer (2.5 mm)
- 250SBV-R3.5 Cutting blades for radius chamfer (3.5 mm)
- 250BV-R4 Cutting blades for radius/straight chamfer (4 mm)
- C5-4 Guide roller

R 3.5R

● PSPC Standard compliant. ● Easy-to-use 120 degree vertical handle. ● Throttle switch for continuous operation. ● Adjustable flange height for different chamfering sizes.

SP-1251NBV

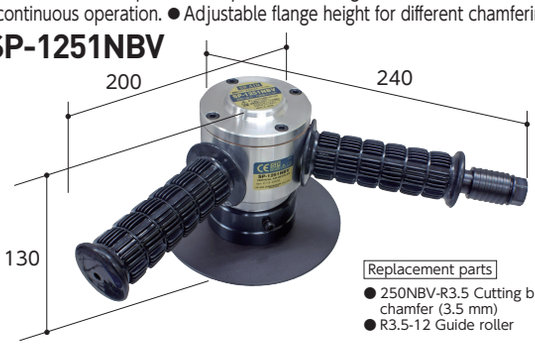

Replacement parts
- 250NBV-R3.5 Cutting blades for radius chamfer (3.5 mm)
- R3.5-12 Guide roller

R 3.5R/2.5R/3C

● Air cooling system (Patented). ● Throttle switch for continuous operation. ● Adjustable flange height for different chamfering sizes. ● Grip can be changed to left or right side.

SP-1250FBV

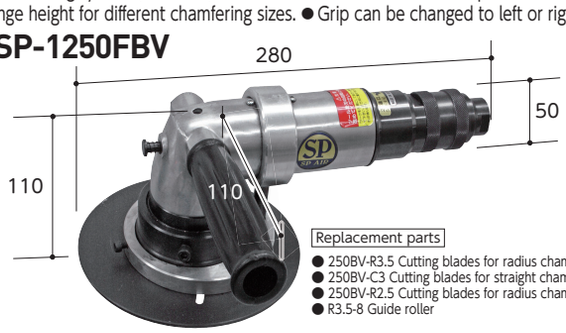

Replacement parts
- 250BV-R3.5 Cutting blades for radius chamfer (2.5 mm)
- 250BV-C3 Cutting blades for straight chamfer (3 mm)
- 250BV-R2.5 Cutting blades for radius chamfer (2.5 mm)
- R3.5-8 Guide roller

EDP	Model No.	Capacity (mm)	Min. Diameter (mm)	Min. Thickness (mm)	Min. Depth (mm)	Free Speed (min^{-1})	Overall Length (mm)	Air Consumption (m^3/min)	Hose Coupling	Net Weight (kg)	Accessories	JAN (4545695)
370149	**SP-1251BV**	R3.5	35	6	11	7500	340	0.9	1/4"NPT	2.8	Cutter (250-R3.5)x3, Torx Wrench (T20), Allen key (H3mm, H4mm), Holder Stopper	002336
370154	**SP-1251HBV**	C5	35	6	11	5000	340	1.1	1/4"NPT	3.2	Cutter (250-C5)x3, Torx Wrench (T20), Allen key (H3mm, H4mm), Holder Stopper	002862
370147	**SP-1251NBV**	R3.5	35	6	11	7500	340	0.9	1/4"NPT	2.8	Cutter (250NBV-R3.5)x3, Torx Wrench (T20), Allen key (H3mm, H4mm), Holder Stopper	002466
370174	**SP-1250FBV**	R3.5	35	6	11	9000	280	0.6	1/4"NPT	3.2	Cutter (250-R3.5)x3, Torx Wrench (T20), Allen key (H3mm, H4mm), Holder Stopper	003845

Air pressure: 0.62 MPa Air hose inner dia.: 9.5 mm Rear exhaust, Front exhaust (SP-1250FBV).

BEVELER

10 PC. CUTTER SET FOR BEVELER

250BV-C3



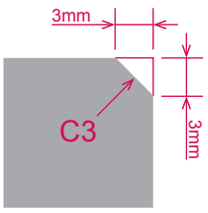

250BV-C5

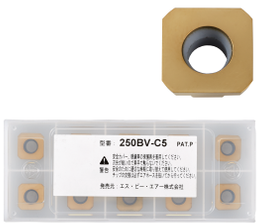

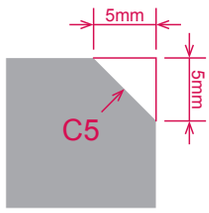

250BV-R2.5





250BV-R3.5





250BV-R4



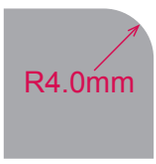

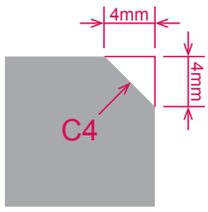

250NBV-R3.5





250SBV-C5



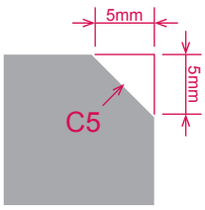

250SBV-R3.5





EDP	Model No.	SPECIFICATION	EDGES	MATERIAL	GUIDE ROLLER	APPLICABLE MODELS	JAN (4545695)
370303	**250BV-C3**	Positive cutter for Straight chamfer 3 mm	8	Carbide (TN coating)	C3-8	1251BV、1251HBV	600723
370304	**250BV-C5**	Positive cutter for Straight chamfer 5 mm	4	Carbide (TN coating)	C5-4	1251HBV	600624
370305	**250BV-R2.5**	Positive cutter for Radius chamfer 2.5 mm	8	Carbide (TN coating)	R2.5-8	1251BV、1251HBV	600563
370306	**250BV-R3.5**	Positive cutter for Radius chamfer 3.5 mm	8	Carbide (TN coating)	R3.5-8	1251BV、1251HBV	600594
370307	**250BV-R4**	Positive cutter for Straight/Radius chamfer 4 mm	8	Carbide (TN coating)	R4-4	1251BV、1251HBV	600600
370308	**250NBV-R3.5**	Negative cutter for Radius chamfer 3.5 mm	12	Cermet	R3.5-12	1251NBV	600617
370309	**250SBV-C5**	Positive cutter for Straight chamfer 5 mm	4	Cermet	C5-4	1251HBV	600747
370310	**250SBV-R3.5**	Positive cutter for Radius chamfer 3.5 mm	8	Cermet	R3.5-8	1251BV、1251HBV	600686

If you want to change the cutter to a different size, you will need to replace the guide roller. Please purchase them separately.

⚠ Safety instructions for operating air tools

Safety precautions

1. Wear suitable clothing for the operation.
To avoid getting caught in the rotating parts, wear closed cuffs and secure ties and accessories while working. When working outdoors, it is recommended to use shoes with rubber soles to prevent slipping.

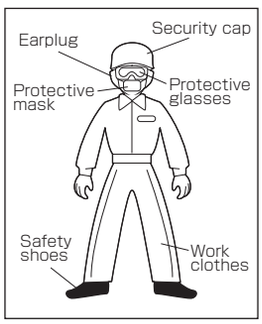

2. Use protective equipment.
Use protective goggles, mask, safety cap, and earplugs depending on the work environment and conditions.

3. The work environment should be bright and clean.
Disorder underfoot is dangerous. Keep the work area well-lit and tidy.

4. If you feel excessive vibration or noise.
Air tools generate vibration and noise. If you feel any discomfort or distress during use, stop working and consult a physician.

5. Work in a correct posture.
Working in an unreasonable posture may cause injury to your back, legs, or hands. Work in a well-balanced posture.

6. Never touch the rotating parts of the air tool.
Never touch the rotating parts of the air tool directly or perform any action that may cause you to touch it.

7. Do not work in the vicinity of highly flammable or explosive materials.
Some air tools may generate sparks while working. Do not work near highly flammable or explosive materials such as gasoline, gas, paint or glue.

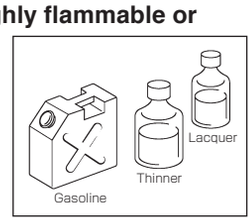

8. Always remove the hose before replacing the tip tool.
Be careful not to start the engine carelessly as it may cause injury.

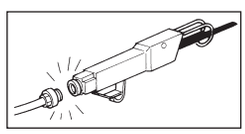

9. Do not attempt to disassemble or modify the product.
Disassembly or modification by non-professionals may cause malfunction or injury and is very dangerous.

10. Make sure that the tip tools and parts are securely attached.
Before use, be sure to check that the tip tool is securely attached and that all screws are not loose or detached.



Precautions for handling

1. Do not throw, drop or otherwise subject the air tool to strong impacts.
Precision parts are assembled together. Do not give strong impacts to these parts, as they may be chipped, dislodged, damaged or broken.

2. Do not operate with no load (no rotation).
Do not operate the tool without load, as the rotation of the tool may not only cause the tool or pin to fly out of the tool tip, but may also cause failure such as seizure and premature wear of the parts.

3. Do not neglect to lubricate the air motor at all times.
The inside of the air motor is subjected to constant wear and tear due to moisture and high speed rotation. Lubricate regularly with good quality air tool oil in order to maintain its durability.

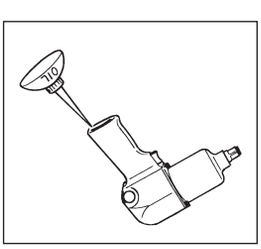

4. Provide clean, dry compressed air free of dust and debris.
Dampness, dust and dirt can cause rust and seizure and shorten tool life. Do not forget to drain the compressor tank and pipes after use.

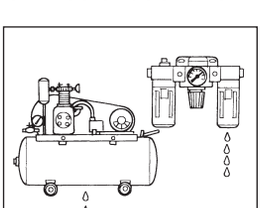

5. Use an air pressure between 0.62 and 0.68 MPa.
If the pressure is low, it will not be able to show its performance, and using it at high pressure will not only accelerate wear of parts and cause failure but may also result in accidents. Install a pressure reducing valve or regulator at the hose attachment point and use at a constant air pressure.

6. Use the specified hose.
Use of a hose with a diameter less than the specified one will result in insufficient flow and will not provide adequate performance. Please use a hose with a larger inner diameter than specified. Also, do not extend the hose longer than 10m as the pressure drops by about 0.09MPa per 10m.

7. Piping should be done as shown in the diagram below.
If this is done completely, it will prevent a drop in air pressure, improve work efficiency, prevent failure of the air tool, and be economical and safe.

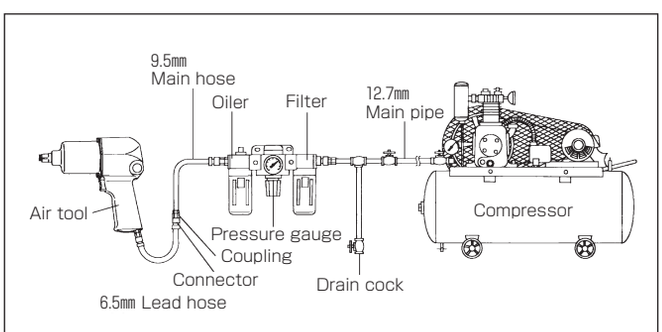

SP AIR®

https://spair.vessel.co.jp/english/

We, VESSEL Co., Inc., are pleased to announce that all the business of former SP AIR Corporation has been transferred to us as of May 1st., 2020.
VESSEL shall provide more high-profile service in the world.
For more details on this business transfer, please contact following attention.

VESSEL Co.,Inc International Sales Department
E-mai: export@vessel.co.jp

VESSEL

Ginosuke Taguchi founded Taguchi Ironworks and started manufacturing screwdrivers in 1916.
Vessel brand and company name were born in 1933, based on the desire to deliver our own tools throughout the globe by ocean vessel.



VESSEL Co., Inc.

17-25, Fukae-Kita 2-chome, Higashinari-ku, Osaka 537-0001 JAPAN
Tel：+81(0)6 6976 7778 Fax：+81(0)6 6972 9441
E-mail：export@vessel.co.jp URL：www.vessel.co.jp/english

VESSEL EUROPE

6, avenue du 1er Mai, ZAE Les Glaises, 91120 Palaiseau FRANCE
Tel：+33(0)1 69 19 17 42 Fax：+33(0)1 69 19 42 20

Distributed by

23060123.01

●Specifications, dimensions, and others are subject to change without prior notice. PRINTED IN JAPAN